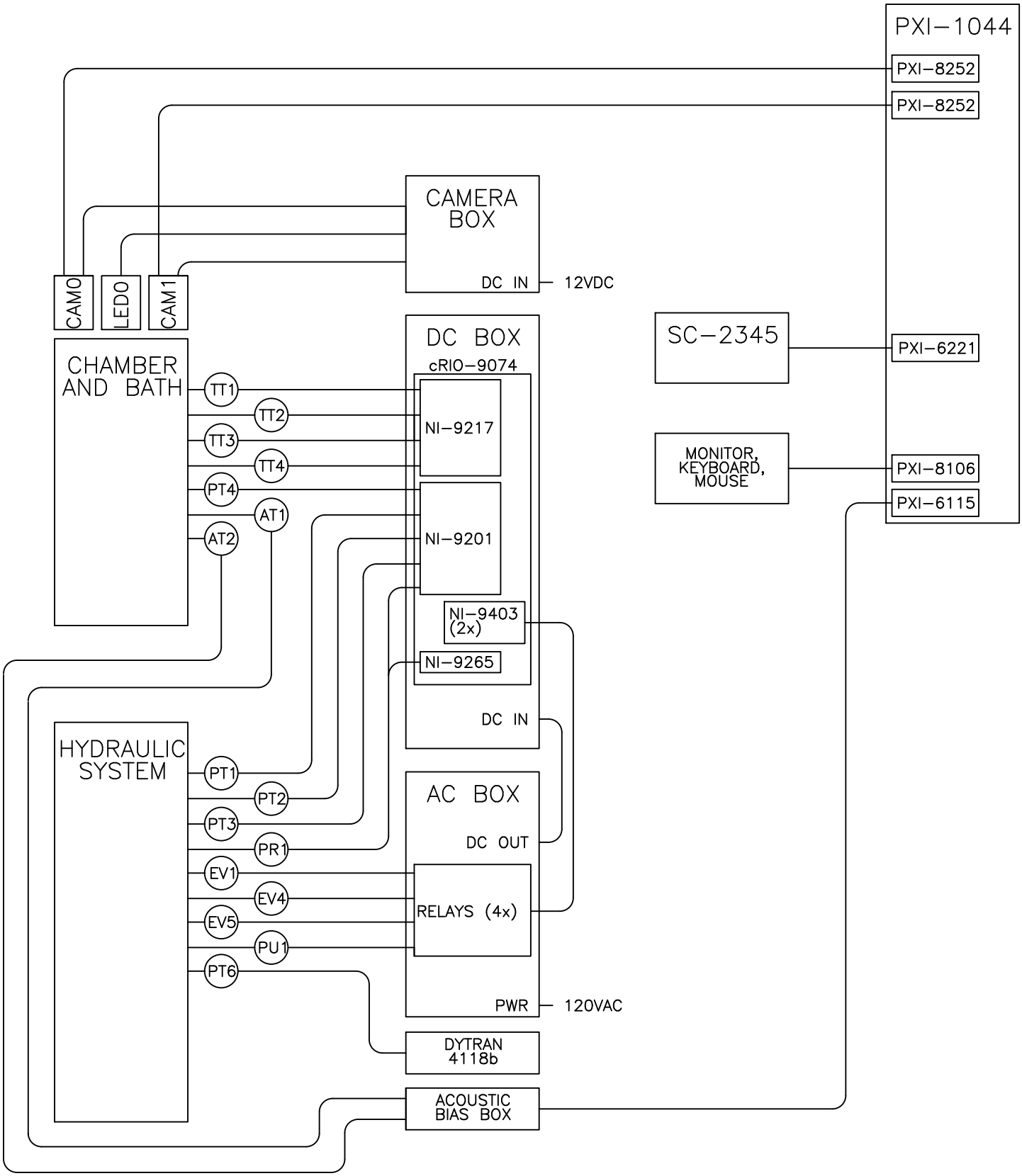

COUPP 0.1 TOP-LEVEL WIRING DIAGRAM	
REV	–
DATE	20-Nov-12
DRAWN BY	MUNEEB HAI
–	–
–	–
FILENAME	COUPP-0_1_top_level_wiring.dwg