PRESSURE VESSEL ENGINEERING NOTE

PER CHAPTER 5031

Prepared by: Michael Sarychev
Preparation date: 05/07/2009

1. Description and Identification
Fill in the label information below:

This vessel conforms to Fermilab ES&H Manual Chapter 5031

Vessel Title CF3I and water distillation #1

Vessel Number PPD-10118 ←Obtain from Division/Section Safety Officer

Vessel Drawing Number C541-1278-00

Maximum Allowable Working Pressures (MAWP):
Internal Pressure 150 psi/ Full vacuum
External Pressure atmospheric

Working Temperature Range -20 °F 200 °F

Contents CF3I or Water

Designer/Manufacturer Alloy Products Corp.

Test Pressure (if tested at Fermi) Acceptance Date: ←Document per Chapter 5034 of the Fermilab ES&H Manual

PSIG, Hydraulic Pneumatic
Accepted as conforming to standard by

of Division/Section Date: ←Actual signature required

NOTE: Any subsequent changes in contents, pressures, temperatures, valving, etc., which affect the safety of this vessel shall require another review.

Reviewed by: Date:

Director's signature (or designee) if the vessel is for manned areas but doesn't conform to the requirements of the chapter.

Date:

Date:
ES&H Director Concurrence

Amendment No.:	Reviewed by:	Date:

Lab Property Number(s): _____
Lab Location Code: 181 (Lab 3) (obtain from safety officer)
Purpose of Vessel(s): CF3I or water distillation
Vessel Capacity/Size: 100 liters Diameter: 18" Length: 18.93"
Normal Operating Pressure (OP) Full vacuum - 92 psig range
MAWP-OP = 164.7 - 58 PSI

List the numbers of all pertinent drawings and the location of the originals.

Drawing #	Location of Original
C541-1278-00	Alloy Products Corp.

2. Design Verification

Is this vessel designed and built to meet the Code or "In-House Built" requirements?
Yes X No_____.

If "No" state the standard that was used _____.
Demonstrate that design calculations of that standard have been made and that other requirements of that standard have been satisfied.
Skip to part 3 "system venting verification."

Does the vessel(s) have a U stamp? Yes X No_____. If "Yes", complete section 2A; if "No", complete section 2B.

A. Staple photo of U stamp plate below.
Copy "U" label details to the side

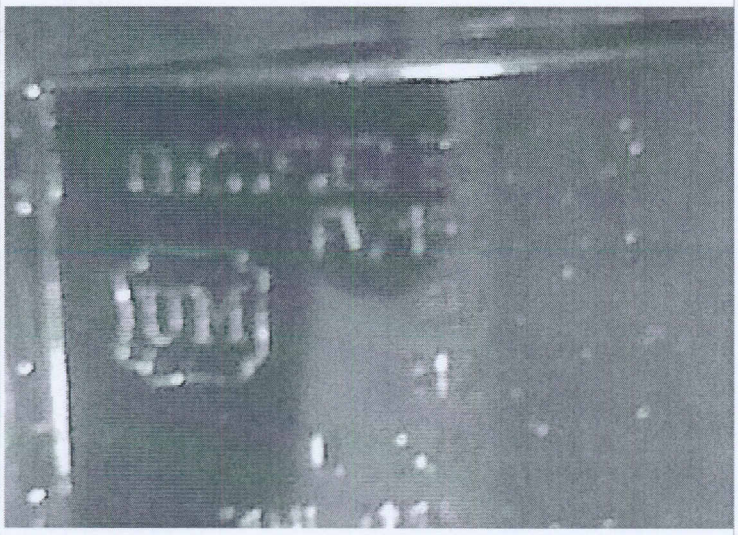

Copy data here:

CERTIFIED BY ALLOY PRODUCTS CORP.
FV/150 PSI MAWP AT 200 DEG. F
MAEWP 50 PSI AT 200 DEG. F
MDMT -20 DEG. F AT 150 PSI
S/N C208579-1-001
304L 10.0 BAR 93 DEG.C
2009

Provide ASME design calculations in an appendix. On the sketch below, circle all applicable sections of the ASME code per Section VIII, Division I. (Only for non-coded vessels)

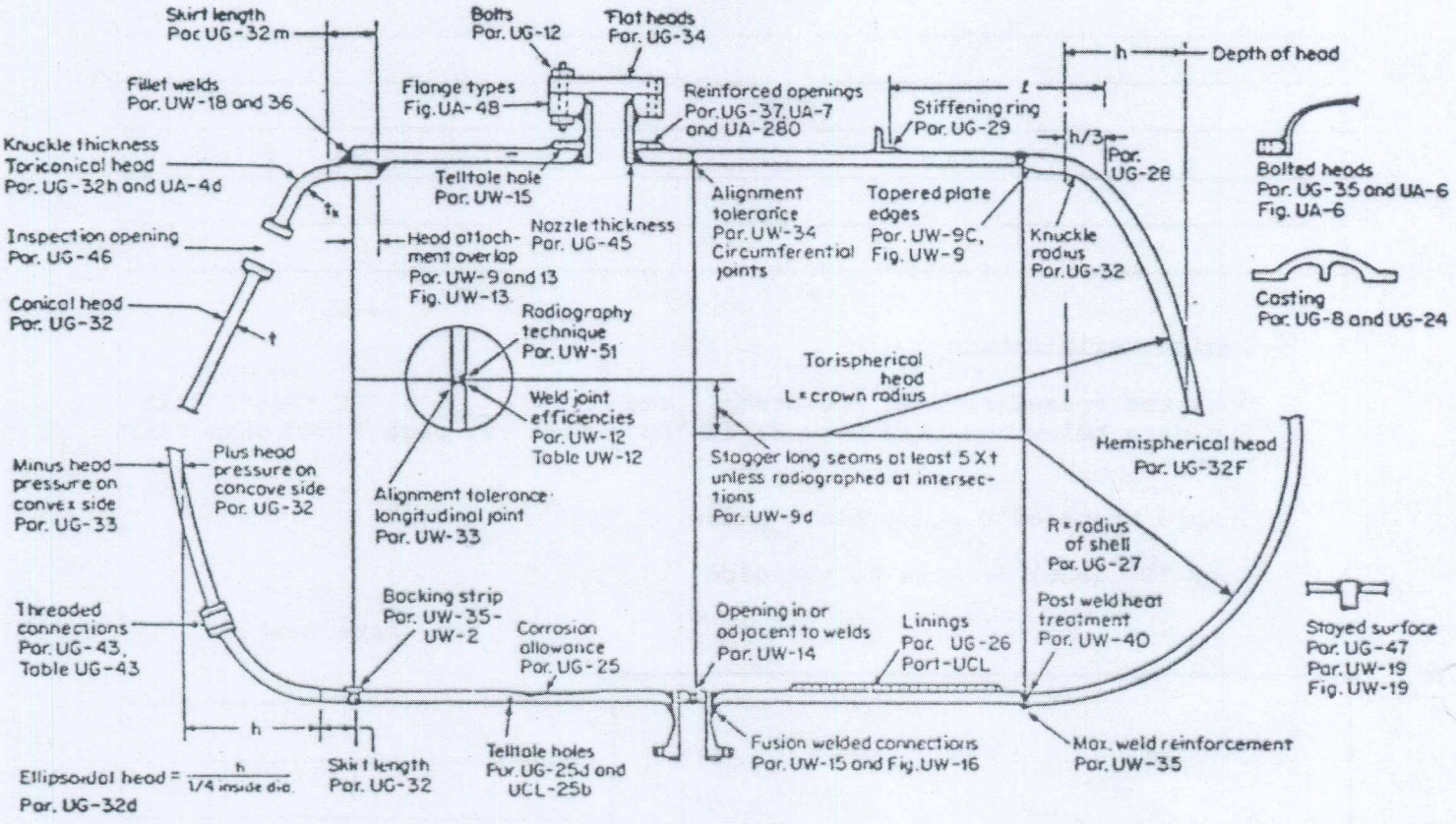

Figure 1. ASME Code: Applicable Sections

2B.

Summary of ASME Code

Item	Reference ASME Code Section	CALCULATION RESULT (Required thickness or stress level vs. actual thickness calculated stress level)
		vs
		vs
		vs
		vs
		vs

3. System Venting Verification Provide the vent system schematic.

Does the venting system follow the Code UG-125 through UG-137?
Yes__X__ No___

Does the venting system also follow the Compressed Gas Association Standards S-1.1 and S-1.3?
Yes __X___ No_____

A "no" response to both of the two proceeding questions requires a justification and statement regarding what standards were applied to verify system venting is adequate.

List of reliefs and settings:

Manufacturer	Model #	Set Pressure	Flow Rate	Size
CIRCLE SEAL	M5120T1-4ML-150	150 PSI	220 SCFM	½" NPT
CIRCLE SEAL	M5120T1-4ML-150	150 PSI	220 SCFM	½" NPT

4. Operating Procedure

Is an operating procedure necessary for the safe operation of this vessel?
Yes_____ No___X___ (If "Yes", it must be appended)

5. Welding Information

Has the vessel been fabricated in a non-code shop? Yes_____ No__X___
If "Yes", append a copy of the welding shop statement of welder qualification (Procedure Qualification Record, PQR) which references the Welding Procedure Specification (WPS) used to weld this vessel.

6. Existing, Used and Unmanned Area Vessels

Is this vessel or any part thereof in the above categories?
Yes_____ No__X___

If "Yes", follow the requirements for an Extended Engineering Note for Existing, Used and Unmanned Area Vessels.

7. Exceptional Vessels

Is this vessel or any part thereof in the above category?
Yes_____ No__X___

If "Yes", follow the requirements for an Extended Engineering Note for Exceptional Vessels.

Relief valves sizing

This vessel is used in series with another identical vessel for distillation and purification of CF3I or water. CF3I is a non-refrigerated, non-flammable (even fire extinguishing) liquefied compressed gas (Properties attached).The vessel is connected to a supply tank (or bubble chamber, or water tank) that is kept at room temperature. Saturation pressure of CF3I at that temperature is about 45 psig, water tank is kept at atmospheric pressure. Purification is made by distillation/evaporation of CF3I or water, and those processes are made by means of coolant flow through the vessel's jacket. Coolant is chilled/heated by a chiller with internal 4100 Btu/Hr heater with 70 deg. C (158 deg. F) maximal temperature. In case of water it's not going to create any problems, but in case of CF3I the pressure might go up to 200 psig, if not relieved. However, as per calculations, the required capacity of relief valve is only 3 scfm air (for a much bigger, 20,000 Btu/Hr heater). Therefore, according to ASME section VIII, Division I, UG-125 (3), pressure relief valves are intended primarily for protection against exposure to fire or other unexpected sources of external heat. The vessel will be used in Lab 3, equipped with sprinklers system, and eventually in a mine underground. Calculations per CGA S-1.3-1995 show that the required relief flow capacity in case of fire is 208 scfm in case of CF3I and 34 scfm in case of water. The vessel have two relief valves (primary and secondary systems) – Circle Seal model # M5120T1-4ML-150 with a set pressure of 150 psi and a flow rate of 220 scfm each, providing an adequate relief in any case.

ASME Safety Relief Valves

Flow Curves

D500 Series

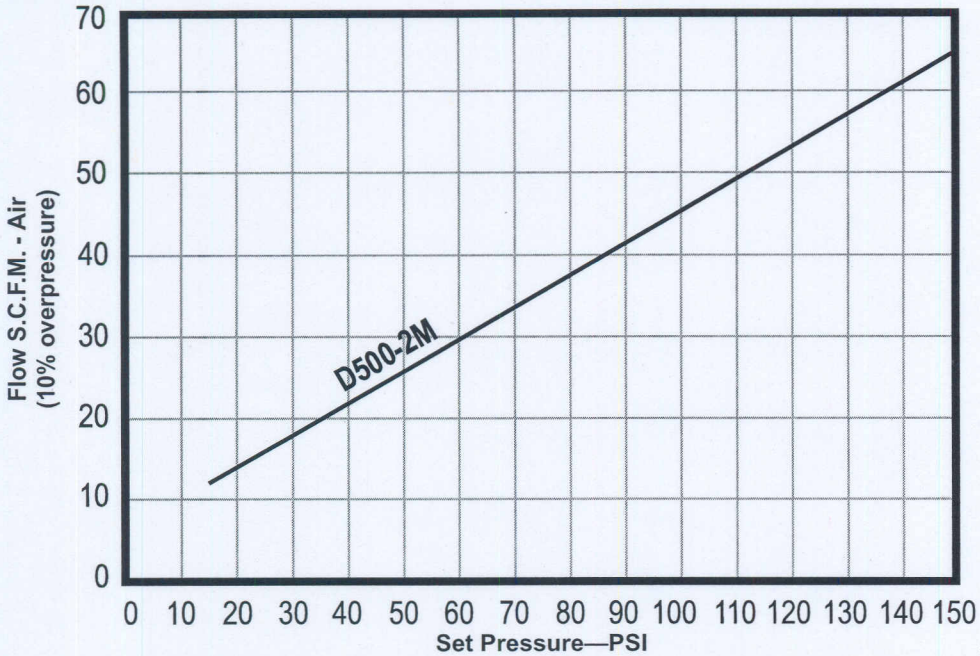

M5100 Series

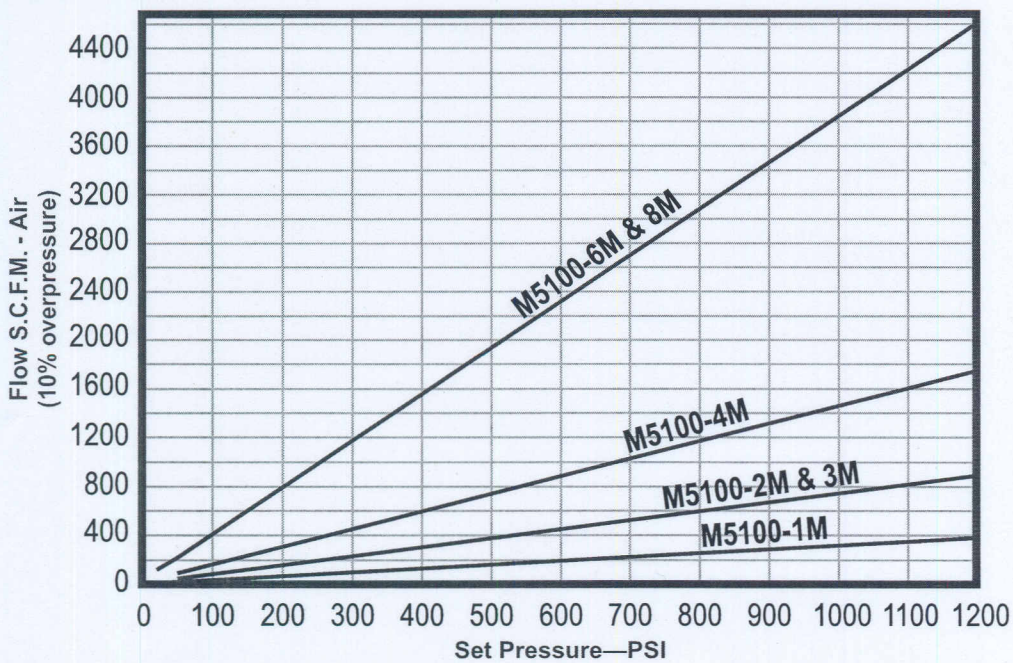

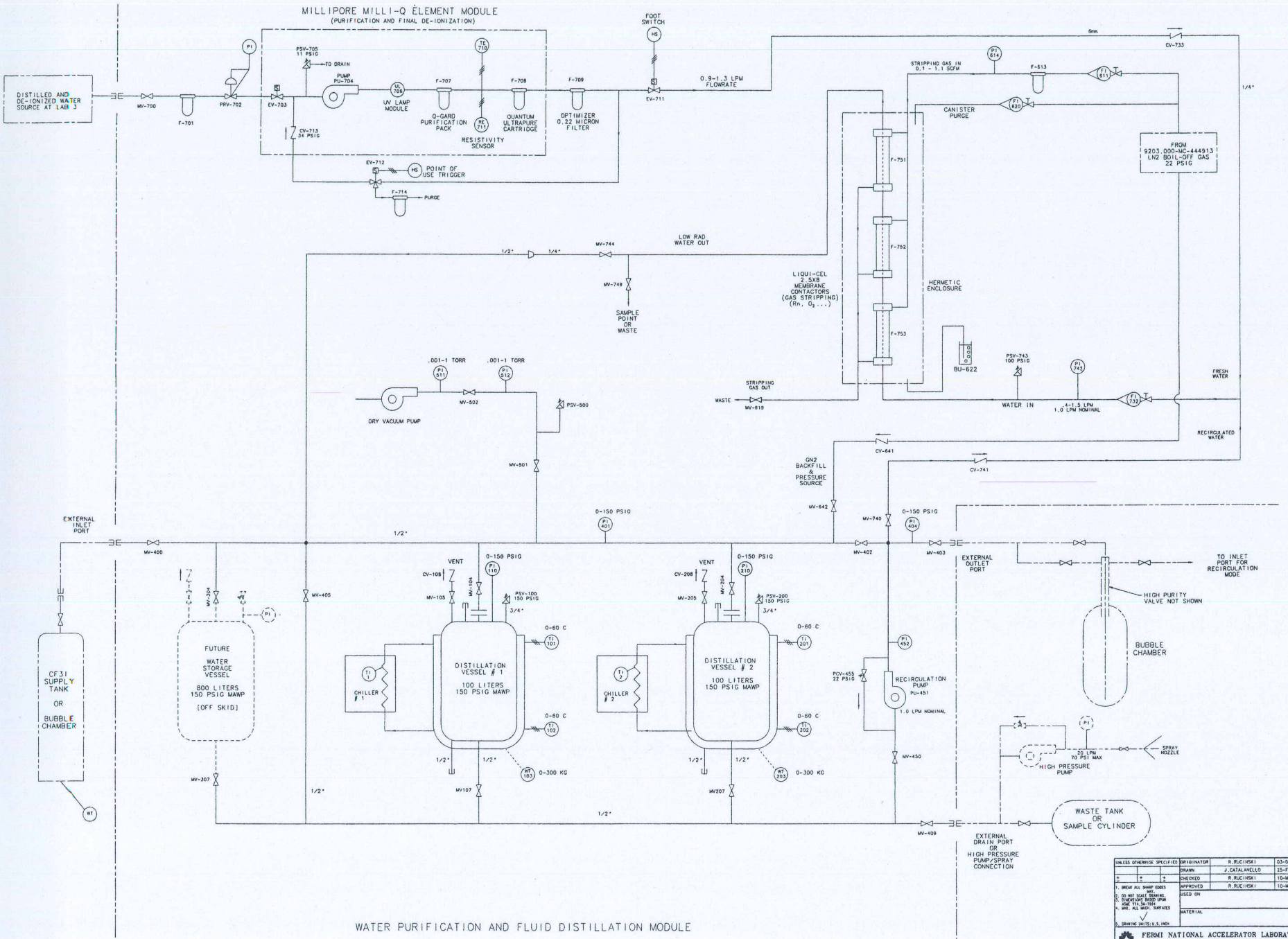
MILLIPORE MILLI-Q ELEMENT MODULE
(PURIFICATION AND FINAL DE-IONIZATION)
DISTILLED AND DE-IONIZED WATER SOURCE AT LAB 3
MV-700
F-701
PRV-702
EV-703
PSV-705 11 PSIG
TO DRAIN
PUMP PU-704
UV LAMP MODULE
Q-GARD PURIFICATION PACK
RESISTIVITY SENSOR
QUANTUM ULTRAPURE CARTRIDGE
OPTIMIZER 0.22 MICRON FILTER
CV-713 34 PSIG
EV-712
POINT OF USE TRIGGER
PURGE
FOOT SWITCH
EV-711
0.9-1.3 LPM FLOWRATE
6mm
CV-733
STRIPPING GAS IN 0.1 - 1.1 SCFM
CANISTER PURGE
FROM 9203.000-MC-444913 LN2 BOIL-OFF GAS 22 PSIG
F-751
F-752
F-753
LIQUI-CEL 2.5X8 MEMBRANE CONTACTORS (GAS STRIPPING) (Rn, O2...)
HERMETIC ENCLOSURE
LOW RAD WATER OUT
MV-744
MV-749
SAMPLE POINT OR WASTE
BU-622
PSV-743 100 PSIG
WATER IN
1.4-1.5 LPM 1.0 LPM NOMINAL
FRESH WATER
RECIRCULATED WATER
STRIPPING GAS OUT
WASTE
MV-619
.001-1 TORR
DRY VACUUM PUMP
MV-502
PSV-500
MV-501
GN2 BACKFILL & PRESSURE SOURCE
CV-641
CV-741
MV-642
MV-740
0-150 PSIG
EXTERNAL INLET PORT
MV-400
MV-402
MV-403
EXTERNAL OUTLET PORT
TO INLET PORT FOR RECIRCULATION MODE
HIGH PURITY VALVE NOT SHOWN
BUBBLE CHAMBER
CF3I SUPPLY TANK OR BUBBLE CHAMBER
FUTURE WATER STORAGE VESSEL 800 LITERS 150 PSIG MAWP [OFF SKID]
MV-405
VENT
PSV-100 150 PSIG
DISTILLATION VESSEL # 1 100 LITERS 150 PSIG MAWP
CHILLER #1
0-60 C
0-300 KG
PSV-200 150 PSIG
DISTILLATION VESSEL # 2 100 LITERS 150 PSIG MAWP
CHILLER #2
RECIRCULATION PUMP PU-451
1.0 LPM NOMINAL
PCV-455 22 PSIG
MV-450
HIGH PRESSURE PUMP
70 LPM 70 PSI MAX
SPRAY NOZZLE
MV-307
MV107
MV207
MV-409
WASTE TANK OR SAMPLE CYLINDER
EXTERNAL DRAIN PORT OR HIGH PRESSURE PUMP/SPRAY CONNECTION
WATER PURIFICATION AND FLUID DISTILLATION MODULE
UNLESS OTHERWISE SPECIFIED
1. BREAK ALL SHARP EDGES .005
2. DO NOT SCALE DRAWING.
3. DIMENSIONS BASED UPON ASME Y14.5M-1994
4. MAX. ALL MACH. SURFACES
5. DRAWING UNITS: U.S. INCH
ORIGINATOR R.RUCINSKI 03-DE
DRAWN J.CATALANELLO 25-FE
CHECKED R.RUCINSKI 10-MA
APPROVED R.RUCINSKI 10-MA
USED ON
MATERIAL
FERMI NATIONAL ACCELERATOR LABORAT
UNITED STATES DEPARTMENT OF ENERGY
MECHANICAL/DETECTORS
COUPP BUBBLE CHAMBER

FORM U-3 MANUFACTURER'S CERTIFICATE OF COMPLIANCE
COVERING PRESSURE VESSELS TO BE STAMPED WITH THE UM SYMBOL, SEE U-1(j)
As Required by the Provisions of the ASME Code Rules, Section VIII, Division 1

C541-1278

1. Manufactured and certified by ALLOY PRODUCTS CORP., 1045 PERKINS AVENUE WAUKESHA, WISCONSIN 53186
(Name and address of Manufacturer)

2. Manufactured for FERMI NATIONAL ACCELERATOR LAB, KIRK ROAD AND WILSON STREET, PO BOX 500, BATAVIA IL 60510
(Name and address of Purchaser)

3. Location of installation NOT KNOWN
(Name and address)

4. Type VERT (Horz., vert., or sphere) | TANK (Tank, separator, etc.) | 100 LITER (Capacity) | SEE REMARKS (Mfg's. serial No.)
- (CRN) | C541-1278-00 (Drawing No.) | 2009 (Year built)

5. ASME Code, Section VIII, Div. 1 2007, A2008 [Edition and Addenda (date)] | NONE (Code Case No.)

6. Shell (a) No. of course(s): 1 (b) Overall length (ft & in.): 18.93"

Course(s)			Material	Thickness		Long. Joint (Cat. A)			Circum. Joint (Cat. A, B, & C)			Heat Treatment	
No.	Diameter, in.	Length (ft & in.)	Spec./Grade or Type	Nom.	Corr.	Type	Full, Spot, None	Eff.	Type	Full, Spot, None	Eff.	Temp.	Time
1	18"	18.93"	SA-240 304L	.187"	0	1	NONE	70	1	NONE	70	-	-
-	-	-	-	-	-	-	-	-	-	-	-	-	-
-	-	-	-	-	-	-	-	-	-	-	-	-	-

7. Heads: (a) SA-240 304L (Mat'l Spec. No., Grade or Type) (H.T. - Time & Temp.) (b) SA-240 304L (Mat'l Spec. No., Grade or Type) (H.T. - Time & Temp.)

	Location (Top, Bottom, Ends)	Thickness		Radius		Elliptical Ratio	Conical Apex Angle	Hemispherical Radius	Flat Diameter	Side to Pressure		Category A		
		Min.	Corr.	Crown	Knuckle					Convex	Concave	Type	Full, Spot, None	Eff.
(a)	TOP	.168"	0	18"	1.12"	-	-	-	-	-	X	-	-	-
(b)	BOTTOM	.168"	0	18"	1.12"	-	-	-	-	-	X	-	-	-

If removable, bolts used (describe other fastening) -
(Mat'l Spec. No., Grade, Size, No.)

8. Type of Jacket 2 Jacket Closure WELD
(Describe as ogee & weld, bar, etc.)

If bar, give dimensions; if bolted describe or sketch N/A

9. MAWP 150 / FV (internal) | 50 (external) psi at max. temp. 200 (internal) | 200 (external) °F. Min. design metal temp. -20 °F at 150 / FV psi.

10. Impact test NO, UHA-51 [Indicate *yes* or *no* and the component(s) impact tested] at test temperature of - °F.

11. ~~Hydro~~, ~~pneu~~, ~~combo~~. test press. 195 Proof test -

12. Nozzles, inspection, and safety valve openings:

Purpose (Inlet, Outlet, Drain, etc.)	No.	Diameter or Size	Flange Type	Material		Nozzle Thickness		Reinforcement Material	How Attached		Location (Insp. Open.)
				Nozzle	Flange	Nom.	Corr.		Nozzle	Flange	
INSPECTION	1	6"	CL150WN	SA-240 304L	-	.168"	0	NONE	-	-	TOP HEAD
INLET	2	.50"	GLAND	SA-479-316L	-	.066"	0	NONE	WELD	-	TOP HEAD
INLET	2	.75"	GLAND	SA-479 316L	-	..066"	0	NONE	WELD		TOP HEAD
INLET	2	.50"	CPLG.	SA-479 316L	-	.120"	0	NONE	WELD	-	JACKET
DRAIN	2	.50"	GLAND	SA-479 316L	-	.066"	0	NONE	WELD	-	BOTTOM
-	-	-	-	-	-	-	-	-	-	-	-
-	-	-	-	-	-	-	-	-	-	-	-

13. Supports: Skirt NO (Yes or no) Lugs 2 (No.) Legs 4 (No.) Others - (Describe) Attached WELDED TO BOTTOM HEAD (Where and how)

14. Manufacturer's Partial Data Reports properly identified and signed by Commissioned Inspectors have been furnished for the following items of the report:(List the name of part, item number, mfg's. name and identifying number)
-
-

15. Remarks: SOLD ON S/O: C208579 SERIAL NO.: C208479-1-001, 002

SAFETY RELIEF DEVICES SHALL BE THE RESPONSIBILITY OF THE END USER
VESSEL HYDRO TESTED IN VERTICAL POSITION

CERTIFICATE OF SHOP COMPLIANCE

We certify that the statements made in this report are correct and that all details of design, material, construction, and workmanship of this vessel conform to the ASME Code for Pressure Vessels, Section VIII, Division 1.

UM Certificate of Authorization No. 4430 Expires 2/28/2010

Date 3/31/2009 Name ALLOY PRODUCTS CORP (Manufacturer) Signed (Representative)

Signed (Certified Individual)

CEI
Form 1005 Rev. 4

ALLOY PRODUCTS CORP.

1045 Perkins Avenue • P.O. Box 529 • Waukesha, WI 53187-0529
Phone 262-542-6603 • Fax 262-542-5421

CERTIFICATE OF COMPLIANCE

March 31, 2009

APC Order Number: C208579

Serial Number(s): C208579-1-001, 002

Drawing Number: C541-1278-00

Vessel's Volume: 100 Liter

☒ ***HYDRO TESTING CERTIFICATION***

The ASME pressure vessel(s) listed above were Hydro tested in accordance with APC Work Instruction QC-101. Both vessels passed the pressure ratings as noted on the drawing.

☒ ***PICKLING CERTIFICATION***

The ASME pressure vessel(s) listed above were pickled in accordance with APC Work Instruction PK-001.

☒ ***ELECTROPOLISH CERTIFICATION***

The ASME pressure vessel(s) listed above were electropolished in accordance with APC Work Instruction PK-007.

☐ ***PASSIVATION CERTIFICATION***

The ASME pressure vessel(s) listed above were passivated in accordance with APC Work Instruction PK-013.

☐ ***VOLUME CERTIFICATION***

The volume of the ASME pressure vessel(s) listed above was verified by the weight of water contained in the vessel(s).

Ron Kasprzak
Quality Manager
Certificate of Compliance, Rev. 0

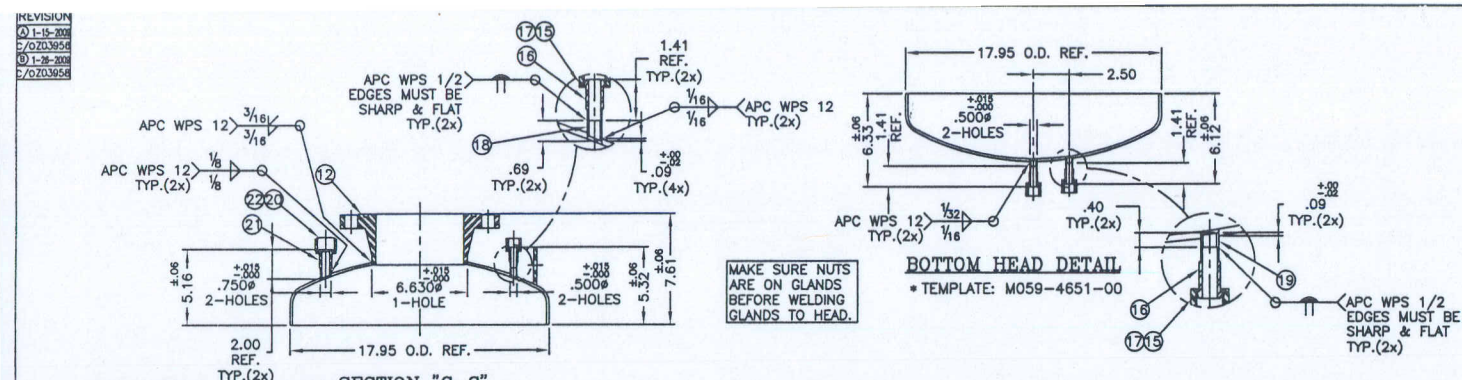

ITEM	DWG./PART NO.	MATERIAL	QTY.
1	C012-0920-00	DISHED HEAD #7GA.(.187) 304L	2
2	SHELL	#7GA.(.187) X 18.93" X 55.83"LG. 304L	1
3	JACKET FLANGE	#8GA.(.165) X 19.33" O.D. 304L	1
4	SUPPORT RING	#14GA.(.075) X .44" X 58.79"LG. 304	1
5	JACKET SHELL	#12GA.(.105) X 20.16" X 59.39"LG. 304	1
6	A128-0765-00	DISHED HEAD #12GA.(.105) 304	1
7	FITTING GUARD	#12GA.(.105) X .75" X 22.24"LG. 304	1
8	LEG	2"O.D. #14GA.(.083) TUBE X 22.44"LG. 304	4
9	A020-0795-02	FOOT PAD 1/4" THK. 304	4
10	LEG BRACE	1"DIA. S.R. X 16.00"LG. 304	4
11	A020-0267-00	LIFTING LUG 304	2
12	A014-0998-00	6" 150# WELD NECK FLANGE 304L	1
13	A105-0401-00	6" 150# BLIND FLANGE 304L	1
14	A100-0755-00	FLANGE O-RING VITON	1
15	A111-0683-00	1/2" VCR FEMALE NUT 316	4
16	A111-0506-00	1/2" VCR BUTT WELD GLAND 316L	4
17	A106-0045-00	1/2" VCR PLUG (NOT SHOWN) 316	4
18	TUBE	1/2" O.D. #16GA.(.065) TUBE X .69"LG. 316L	2
19	TUBE	1/2" O.D. #16GA.(.065) TUBE X .40"LG. 316L	2
20	A112-0279-00	3/4" VCR FEMALE NUT 316	2
21	A111-0830-00	3/4" VCR BUTT WELD GLAND (MODIFIED) 316L	2
22	A106-0053-00	3/4" VCR PLUG (NOT SHOWN) 316	2
23	A022-0293-00	1/2"-14NPT STEP COUP. 316L	2
24	A111-0177-00	1/2"-14NPT PIPE PLUG 316	2
25	A112-0007-19	3/4"-10 BOLT (NOT SHOWN) 304	8
26	A112-0008-14	3/4"-10 NUT (NOT SHOWN) 304	8
27	A114-0002-19	3/4" LOCK WASHER (NOT SHOWN) 302	8
28	A029-0639-00	BLANK NAMEPLATE 304	1

APC CERTIFICATION

We certify that vessel(s),

S/N C308579-1-

001, 002 conform to this Engineering Drawing. All details of design, material, construction and workmanship are in accordance with this drawing.

Signature Date 3-30-09

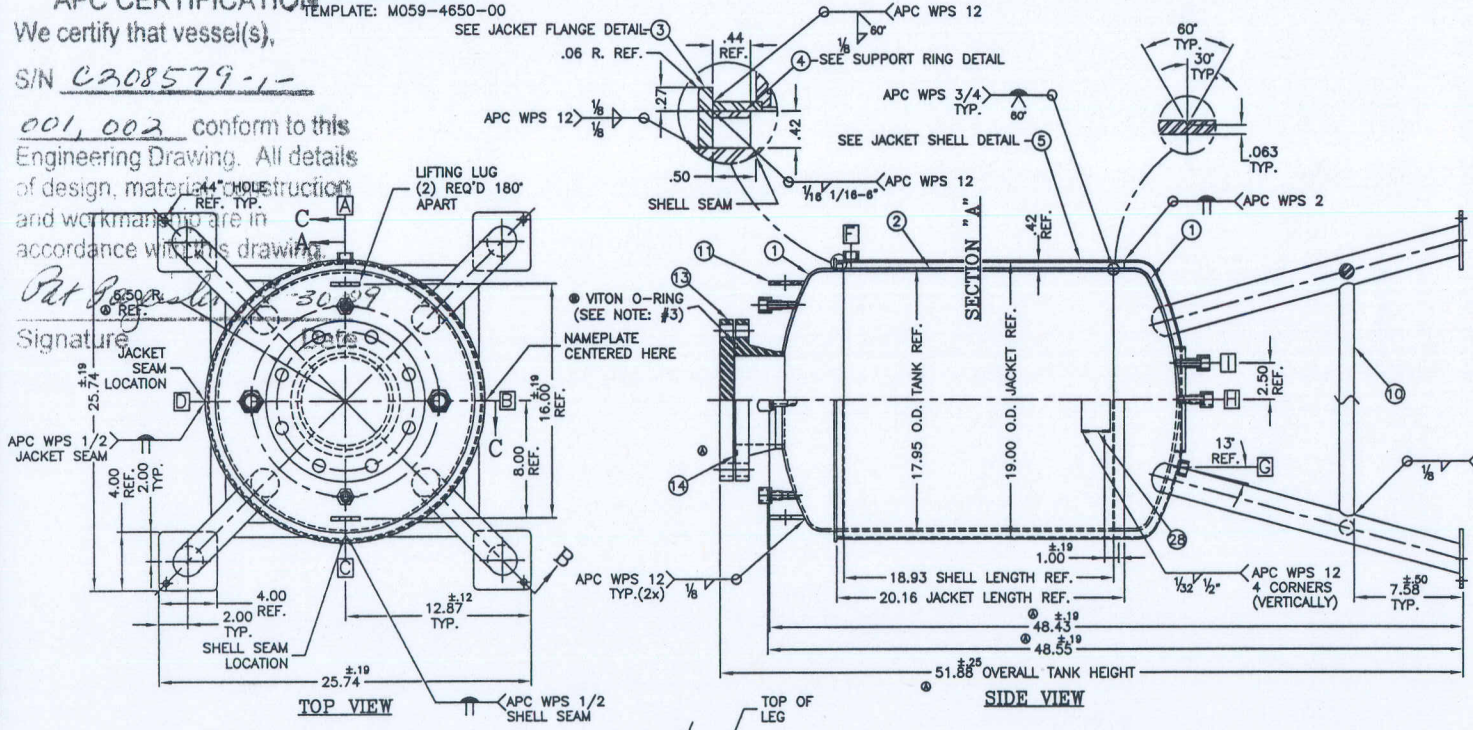

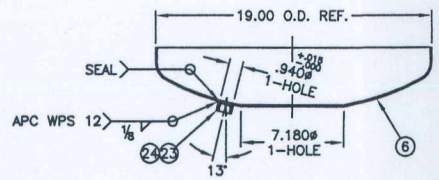

BOTTOM JACKET HEAD DETAIL

* TEMPLATE: M059-4652-00

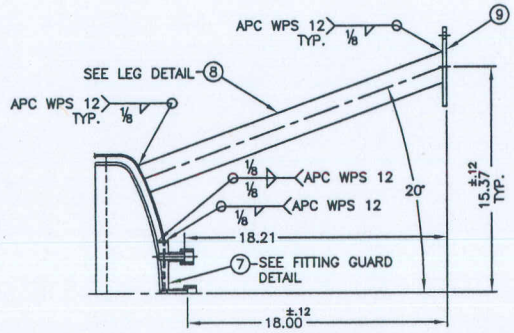

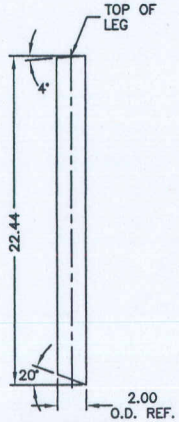

NOTES:

1. ALL TANK WELDS ARE TO BE PERFORMED WITH CERIATED TUNGSTEN ELECTRODES.
2. ⊛ TANK WILL BE HELIUM LEAK TESTED AT 1X10-6 CC-ATM/SEC BEFORE SHIPPING.
3. ⊛⊛ CUSTOMER APPROVES OF VITON O-RING FOR FLUID CF3I AND IS AWARE OF RADIO-PURITY ISSUES THAT WILL BE RESOLVED UPON CUSTOMER RECIEVING THE VESSEL.
4. SHELL & TOP HEAD ASSEMBLY TO BE WELDED FIRST TO BE ABLE TO POLISH TOP GIRTH SEAM.

MARK	SIZE	TYPE	LOCATION	DESCRIPTION
I	1/2"	VCR	BOTTOM	1/2"VCR W/1/2"FEMALE NUT W/PLUG (PLUG NOT SHOWN)
H	1/2"	VCR	BOTTOM	1/2"VCR W/1/2"FEMALE NUT W/PLUG (PLUG NOT SHOWN)
⊛ G	1/2"	NPT	JACKET BOTTOM	STEPPED COUPLING W/PLUG (PLUG NOT SHOWN)
⊛ F	1/2"	NPT	JACKET	STEPPED COUPLING W/PLUG (PLUG NOT SHOWN)
⊛⊛ E	6"	ANSI	TOP	6" WELDNECK FLANGE W/VITON O-RING & BLIND FLANGE
D	3/4"	VCR	TOP	3/4"VCR W/3/4"FEMALE NUT W/PLUG (PLUG NOT SHOWN)
C	1/2"	VCR	TOP	1/2"VCR W/1/2"FEMALE NUT W/PLUG (PLUG NOT SHOWN)
B	3/4"	VCR	TOP	3/4"VCR W/3/4"FEMALE NUT W/PLUG (PLUG NOT SHOWN)
A	1/2"	VCR	TOP	1/2"VCR W/1/2"FEMALE NUT W/PLUG (PLUG NOT SHOWN)

NOZZLE SCHEDULE

CUSTOMER: FERMI NAT'L LAB

	VESSEL	JACKET
STAMP	UM	UM
X-RAY	N/A	N/A
MIN TEMP	-20°F	-20°F
MAX TEMP	200°F	200°F
MAX PRESSURE	150 PSIG	50 PSIG
FULL VACUUM	YES	NO
HYDROSTATIC TEST	195 PSIG	85 PSIG
AIR TEST	N/A	N/A
FULLY DRAINABLE	YES	NO

I.D. FINISH: 8 Ra./EP WELDS FLUSH

O.D. FINISH 2B/EP AS WELDED

MATERIAL: 304L/316L ASME SPEC:

SHEET/PLATE	SA-240
BAR STOCK	SA-479
WROUGHT/FORGED	SA-182
WELDED/SEAMLESS PIPE	SA-312
TUBING	SA-249

CONSTRUCTION MEETS ASME CODE, SECT. VIII DIV. 1

ALL WELDS ARE TO BE GTAW AND (OR) GMAW.

DWG. UNITS ARE IN INCHES UNLESS OTHERWISE SPECIFIED. TOLERANCES .XX DECIMALS ±.030 .XXX DECIMALS ±.015 ANGLES ±1°

DRAWN JD | DATE 1-09-2009 | APP'D RW | PLT'D SCALE 1/10

CAL2662 | I

NOTICE

THIS DRAWING AND THE DATA SHOWN ARE PROPRIETARY INFORMATION AND SHALL NOT BE USED WITHOUT APPROVAL OF ALLOY PRODUCTS CORP.

ALLOY PRODUCTS CORP WAUKESHA, WISCONSIN

18" O.D. TANK ASSEMBLY 100 LITER JACKETED TANK W/LEGS (sheet 1 of 2)

ASME ⊛304L

DWG. NO. C541-1278-00 REV. B

PPD 10118/10119 05/05/09 M. Sargchev 1
checked R. Bemrose-Fetter

Relief flow capacity requirements for fire conditions per CGA S-1.3-1995 (5.3.2)

$$Q_a = F G_u A^{0.82}$$

$F = 1$

$A = 2A_1 + A_2$

$A_1 = \pi R^2[1+k(2-k)] = \pi \cdot 0.74^2[1+0.33(2-0.33)] = 2.67 ft^2$

$R = 0.74'$

$k = 0.33'$

$A_2 = \pi D L \qquad L = 1.58'$

$A_2 = \pi \cdot 1.48 \cdot 1.58 = 7.35 ft^2$

$A = 2 \cdot 2.67 + 7.35 = 12.67 ft^2$

① CF3I case

$$G_u = \frac{633{,}000}{C \cdot L}\sqrt{\frac{ZT}{M}}$$

$k = C_p/C_v = 1.4357 \Rightarrow C = 359$

$L = 71.869 \, kJ/kg = 30.9084 \, Btu/lb$

$M = 195.91 \qquad R = \frac{1545.3}{M} = 7.89$

$T = T_{sat}$ @ relief pressure

$P = (MAWP)(1.21) = 164.7 \cdot 1.21 = 199.3 \, psia$

$T = 67°C = 612°R$

$$Z = \frac{PV}{RT} = \frac{199.144 \cdot 0.124}{7.89 \cdot 612} = 0.74$$

$$G_4 = \frac{633{,}000}{359 \cdot 30.9}\sqrt{\frac{0.736 \cdot 612}{195.91}} = 86.5$$

$$Q_a = 86.5\,(12.67)^{0.76} = 694 \text{ scfm}$$

Since this vessel will be used in area equiped with sprinklers OR underground, and it's a non-flammable gas not subject to fire engulfment,

$$Q_a = 694 \cdot 0.3 = 208 \text{ scfm (reduced to 30\%)}$$

② H_2O case

Relieving conditions (@ saturation)

$P = 199.3$ psia $(MAWP \cdot 1.21) = 13.75$ bar

$T = 467K = 840°R$

$L = 1962\ kJ/kg = 843.7\ Btu/Lb$

$V = 0.145\ m^3/kg = 2.31\ ft^3/lb$

$C_p/C_v = 1.31 \Rightarrow C = 348 \qquad M = 18.02$

$$R = \frac{1545.3}{M} = 85.75$$

$$Z = \frac{PV}{RT} = \frac{199.3 \cdot 144 \cdot 2.31}{85.75 \cdot 840} = 0.92$$

$$G_u = \frac{635{,}000}{348 \cdot 843.7}\sqrt{\frac{0.92 \cdot 840}{18.02}} = 14.11$$

$$Q_a = 14.11 \cdot (12.67)^{0.82} = 113.89$$

Reduced to 30% $Q_a = 113.89 \cdot 0.3 = 34$ scfm

Operational conditions for
Heater power control failure:
Heaters might go up to 158°F or 70°C
Ok for water
For CF3I, at 70°C P = 197 psig –
– higher than MAWP and 110% MAWP
$L = 32.9\ BTU/lb$
Heater capacity is $4{,}100\ BTU/HR$
I will use $20{,}000\ BTU/HR$ (just in case)

$$\dot{m} = \frac{Q}{L} = \frac{20{,}000\ BTU \cdot lb}{HR \cdot 32.9\ BTU} = 607.9\ lb/HR =$$

$$= 10.1\ lb/min$$

$$\gamma = 0.124\ ft^3/lb$$

Required capacity: $10.1\ lb/min \cdot 0.124\ ft^3/lb =$
$= 1.26\ ft^3/min$ (CF_3I)

Per ASME BPVC Appendix 5
"Capacity conversions for Safety valves"

$$W_A = \frac{KAPC}{IT\ 1\frac{1}{2}}$$

KAP = const. for the same valve

$$W_{a_{air}} = \frac{C_{air} \cdot KAP}{\left(\frac{520}{29}\right)^{1/2}} = \frac{356 \cdot KAP}{\left(\frac{520}{29}\right)^{1/2}} = 84.07 \cdot KAP$$

$C_{air} = 356$

$T = 520°R \quad (60°F)$

$M = 29$

$$W_{a_{CFSI}} = \frac{359 \cdot KAP}{\left(\frac{612}{195.91}\right)^{1/2}} = 203.117 \cdot KAP$$

$C = 359$

$M = 195.91$

$T = 612°R$ (at relieving conditions)

$$\frac{W_{a_{CFSI}}}{W_{a_{air}}} = 2.42$$

Therefore, needed relief capacity will be $1.26\ ft^3/min \times 2.42 =$

$= \underline{3\ scfm}$ Air @ 60°F

CF_3I "REFPROP 7"

Temperature Celsius	Pressure Mpa	Liquid Density kg/m^3	Vapor Density kg/m^3	Liquid Enthalpy kJ/kg	Vapor Enthalpy kJ/kg	Liquid Cp/Cv	Vapor Cp/Cv
0	0.22777	2203.6	21.368	200	296.94	1.5608	1.1989
1	0.23553	2198.7	22.058	200.54	297.2	1.5614	1.2001
2	0.24348	2193.9	22.766	201.08	297.46	1.562	1.2014
3	0.25164	2189	23.492	201.61	297.72	1.5626	1.2027
4	0.26001	2184.1	24.235	202.16	297.98	1.5633	1.204
5	0.26859	2179.2	24.997	202.7	298.24	1.564	1.2053
6	0.27739	2174.3	25.778	203.24	298.5	1.5647	1.2067
7	0.2864	2169.4	26.578	203.79	298.76	1.5655	1.2081
8	0.29563	2164.4	27.398	204.33	299.02	1.5663	1.2096
9	0.30509	2159.4	28.237	204.88	299.27	1.5672	1.2111
10	0.31478	2154.4	29.096	205.43	299.53	1.568	1.2126
11	0.32469	2149.4	29.976	205.98	299.78	1.5689	1.2142
12	0.33485	2144.3	30.877	206.53	300.03	1.5699	1.2158
13	0.34524	2139.3	31.8	207.08	300.28	1.5709	1.2175
14	0.35588	2134.2	32.744	207.64	300.53	1.5719	1.2192
15	0.36676	2129.1	33.711	208.19	300.78	1.573	1.2209
16	0.37789	2123.9	34.7	208.75	301.03	1.5741	1.2227
17	0.38928	2118.8	35.712	209.31	301.27	1.5752	1.2245
18	0.40092	2113.6	36.747	209.87	301.52	1.5764	1.2264
19	0.41282	2108.4	37.807	210.43	301.76	1.5776	1.2284
20	0.42499	2103.1	38.891	210.99	302.01	1.5789	1.2304
21	0.43743	2097.9	39.999	211.55	302.25	1.5802	1.2324
22	0.45014	2092.6	41.133	212.12	302.49	1.5815	1.2345
23	0.46312	2087.3	42.293	212.69	302.72	1.5829	1.2366
24	0.47639	2081.9	43.48	213.25	302.96	1.5844	1.2389
25	0.48994	2076.5	44.693	213.83	303.2	1.5859	1.2411
26	0.50377	2071.2	45.933	214.4	303.43	1.5874	1.2435
27	0.5179	2065.7	47.202	214.97	303.66	1.589	1.2459
28	0.53232	2060.3	48.499	215.54	303.89	1.5906	1.2483
29	0.54704	2054.8	49.824	216.12	304.12	1.5923	1.2508
30	0.56207	2049.3	51.18	216.7	304.35	1.5941	1.2534
31	0.5774	2043.7	52.566	217.28	304.58	1.5959	1.2561
32	0.59304	2038.1	53.982	217.86	304.8	1.5977	1.2589
33	0.609	2032.5	55.43	218.44	305.02	1.5996	1.2617
34	0.62527	2026.9	56.91	219.03	305.25	1.6016	1.2646
35	0.64187	2021.2	58.423	219.61	305.46	1.6036	1.2676
36	0.6588	2015.5	59.969	220.2	305.68	1.6057	1.2706
37	0.67605	2009.7	61.55	220.79	305.9	1.6079	1.2738
38	0.69365	2004	63.165	221.38	306.11	1.6101	1.2771
39	0.71158	1998.1	64.816	221.97	306.32	1.6124	1.2804
40	0.72985	1992.3	66.503	222.57	306.53	1.6148	1.2839
41	0.74847	1986.4	68.227	223.17	306.74	1.6173	1.2874

Temperature Celsius	Pressure Mpa	Liquid Density kg/m^3	Vapor Density kg/m^3	Liquid Enthalpy kJ/kg	Vapor Enthalpy kJ/kg	Liquid Cp/Cv	Vapor Cp/Cv
49	0.91046	1937.7	83.464	228.01	308.33	1.6399	1.3201
50	0.9324	1931.4	85.563	228.62	308.52	1.6432	1.3247
51	0.95473	1925.1	87.708	229.24	308.7	1.6465	1.3296
52	0.97746	1918.7	89.902	229.86	308.88	1.65	1.3346
53	1.0006	1912.3	92.144	230.48	309.06	1.6536	1.3398
54	1.0241	1905.8	94.437	231.1	309.24	1.6573	1.3451
55	1.048	1899.3	96.781	231.72	309.42	1.6611	1.3507
56	1.0724	1892.7	99.178	232.35	309.59	1.6651	1.3564
57	1.0972	1886.1	101.63	232.98	309.76	1.6692	1.3624
58	1.1224	1879.4	104.14	233.61	309.92	1.6735	1.3685
59	1.148	1872.6	106.7	234.25	310.09	1.6779	1.3749
60	1.174	1865.8	109.32	234.88	310.24	1.6825	1.3815
61	1.2005	1858.9	112.01	235.52	310.4	1.6872	1.3884
62	1.2274	1851.9	114.75	236.16	310.55	1.6922	1.3955
63	1.2548	1844.9	117.56	236.81	310.7	1.6973	1.4029
64	1.2827	1837.9	120.43	237.46	310.85	1.7026	1.4106
65	1.3109	1830.7	123.38	238.11	310.99	1.7081	1.4186
66	1.3397	1823.5	126.39	238.76	311.13	1.7138	1.427
67	1.3689	1816.2	129.47	239.41	311.27	1.7198	1.4357
68	1.3986	1808.8	132.63	240.07	311.4	1.726	1.4447
69	1.4288	1801.4	135.87	240.73	311.53	1.7324	1.4542
70	1.4594	1793.9	139.18	241.4	311.65	1.7391	1.464
71	1.4905	1786.3	142.57	242.06	311.77	1.7461	1.4743
72	1.5222	1778.6	146.05	242.74	311.88	1.7535	1.4851
73	1.5543	1770.8	149.62	243.41	311.99	1.7611	1.4963
74	1.5869	1762.9	153.28	244.09	312.09	1.7691	1.5081
75	1.6201	1755	157.03	244.77	312.19	1.7774	1.5205
76	1.6537	1746.9	160.87	245.45	312.29	1.7862	1.5334
77	1.6879	1738.7	164.82	246.14	312.38	1.7954	1.547
78	1.7226	1730.5	168.88	246.83	312.46	1.805	1.5613
79	1.7579	1722.1	173.04	247.53	312.54	1.8151	1.5764
80	1.7936	1713.6	177.31	248.23	312.61	1.8257	1.5923
81	1.83	1705	181.7	248.93	312.68	1.8369	1.609
82	1.8669	1696.3	186.22	249.64	312.74	1.8487	1.6267
83	1.9043	1687.4	190.86	250.35	312.79	1.8611	1.6453
84	1.9423	1678.4	195.64	251.07	312.83	1.8742	1.6651
85	1.9809	1669.3	200.55	251.8	312.87	1.8882	1.6861
86	2.0201	1660	205.61	252.52	312.9	1.9029	1.7084
87	2.0598	1650.6	210.83	253.26	312.93	1.9185	1.7321
88	2.1001	1641	216.21	254	312.94	1.9352	1.7574
89	2.1411	1631.2	221.75	254.74	312.95	1.9529	1.7843
90	2.1826	1621.3	227.48	255.49	312.94	1.9718	1.8132
91	2.2248	1611.2	233.39	256.25	312.93	1.9921	1.8442
92	2.2676	1600.9	239.5	257.01	312.91	2.0138	1.8774
93	2.311	1590.3	245.82	257.78	312.87	2.0371	1.9132
94	2.3551	1579.6	252.37	258.56	312.83	2.0623	1.9519
95	2.3998	1568.6	259.15	259.35	312.77	2.0895	1.9938
96	2.4452	1557.4	266.19	260.14	312.7	2.1189	2.0392
97	2.4912	1545.9	273.49	260.95	312.61	2.151	2.0888

Temperature Celsius	Pressure Mpa	Liquid Density kg/m^3	Vapor Density kg/m^3	Liquid Enthalpy kJ/kg	Vapor Enthalpy kJ/kg	Liquid Cp/Cv	Vapor Cp/Cv
98	2.5379	1534.1	281.09	261.76	312.52	2.186	2.143
99	2.5854	1522	289	262.59	312.4	2.2244	2.2025
100	2.6335	1509.6	297.24	263.42	312.27	2.2667	2.2681
101	2.6823	1496.8	305.85	264.27	312.12	2.3135	2.3408
102	2.7318	1483.6	314.86	265.12	311.95	2.3656	2.4217
103	2.7821	1470	324.3	266	311.76	2.424	2.5124
104	2.8331	1455.9	334.21	266.89	311.55	2.4898	2.6147
105	2.8848	1441.3	344.65	267.79	311.31	2.5646	2.7308
106	2.9373	1426	355.68	268.72	311.05	2.6503	2.8639
107	2.9906	1410.2	367.36	269.66	310.75	2.7496	3.018
108	3.0447	1393.6	379.79	270.63	310.42	2.8662	3.1983
109	3.0996	1376.1	393.06	271.62	310.05	3.0047	3.4123
110	3.1554	1357.6	407.32	272.65	309.63	3.1723	3.6704
111	3.212	1337.9	422.75	273.71	309.16	3.3793	3.9879
112	3.2694	1316.8	439.57	274.82	308.62	3.6415	4.388
113	3.3278	1294	458.1	275.98	308.01	3.9844	4.9084
114	3.3871	1268.9	478.82	277.21	307.29	4.4526	5.6136
115	3.4473	1240.9	502.42	278.53	306.45	5.1301	6.6248
116	3.5085	1208.8	530.08	279.98	305.44	6.197	8.1991
117	3.5708	1170.3	563.99	281.62	304.15	8.1201	10.995
118	3.6343	1120.6	609.19	283.61	302.39	12.576	17.338
119	3.6991	1042.9	683.54	286.48	299.45	32.726	44.976

ABOUT US | ORDERING INFO | CONTACT US | SPECIAL OFFERS
THE NATIONAL ACADEMIES PRESS
SEARCH | QUESTIONS? CALL 888-624-8373
Share | E-mail This | Podcasts | RSS | Subscribe
THE NATIONAL ACADEMIES
Advisers to the Nation on Science, Engineering, and Medicine
Items in cart [0]

Iodotrifluoromethane: Toxicity Review (2004)
Board on Environmental Studies and Toxicology (BEST)

Search This Book GO

Page 16

Web Search Builder
Skim This Chapter
Reference Finder

PAPERBACK
list: $29.75
Web: $26.78
add to cart
Rights & Permissions

Free PDF Access

Free Resources

Sign in to download PDF book and chapters

PDF EXECUTIVE SUMMARY

Display this book on your site!

Related Titles

Acute Exposure Guideline Levels for Selected Airborne Chemicals: Volume 5

Spacecraft Water Exposure Guidelines for Selected Contaminants: Volume 2

Other Related Titles

The following HTML text is provided to enhance online readability. Many aspects of typography translate only awkwardly to HTML. Please use the page image as the authoritative form to ensure accuracy.

TABLE 2-1 Physical Properties of CF_3I

Physical or Chemical Property	Value or Description
Chemical Abstracts Service no. (CAS)	2314-97-8
European Chemical no. (EC)	219-014-5
Molecular weight	195.91
Physical state at 20°C	Gas
Melting point	−110°C (166°F)
Boiling point at 1 atm	−22.5°C (8.5°F)
Liquid density at -32.5°C	2.36 g/mL
Liquid density at 25°C	g/mL
Odor threshold	Odorless
Solubility in water	Slight
Vapor pressure at 25°C	78.4 psia
Pressure-temperature curve	log psia = 5.7411-1146.82/T/K
Critical pressure	586 psia (estimated)
Critical temperature	122°C (estimated)
Critical volume	225 cm^3/mole (estimated)
Heat of formation	−141 kcal/mole
Heat of vaporization	5.26 kcal/mole
Electron affinity	150 ± 20 kJ/mole
Refractive index (liquid) at 42°C	1.379
Dipole moment	1.68 debye
Vapor heat capacity	16.9 cal/mole-K
C-I bond disassociation energy	54 kcal/mole
Vapor density (air = 1)	6.9[a]

[a]Data from PTCL 2003.

Abbreviations: g/mL, gram per milliliter; cm^3/mol, cubic meter per mole; kcal/mole, kilocalorie per mole; kJ/mole, kilojoule per mole; cal/mole-K, calorie per mole Kelvin; psia, pounds per square inch absolute.

Source: Adapted from Moore et al. 1994 (see Appendix B).

EFFICACY

The "Efficacy" section of the update indicates that the minimal design concentration—that is, the minimal amount of a chemical required to extinguish an *n*-heptane fire—of CF_3I, 3.2 vol%, is slightly lower than that

Search This Book GO

Page 16

Front Matter (R1-R16)
Summary (1-10)
1 Introduction (11-14)
2 Physical and Chemical Properties and Efficacy (15-17)
3 Health Effects: Toxicity Studies (18-27)
4 Cardiac Sensitization (28-48)
5 Physiologically Based Pharmacokinetic Modeling (49-57)
6 Human Exposure (58-67)
References (68-73)
Appendix A: Biographical Information on Subcommittee on Iodotrifluoromethane (74-76)
Appendix B: Toxicity Review for Iodotrifluoromethane (CF_3I): 2002 Update (77-96)

[Top of Page] [Home] [Contact Us] [Help] [The National Academies Home]

Copyright © 2009. National Academy of Sciences. All rights reserved. 500 Fifth St. N.W., Washington, D.C. 20001.
Terms of Use and Privacy Statement