CIRTE Piping & Instrumentation

Version 1.2, 01/17/2012
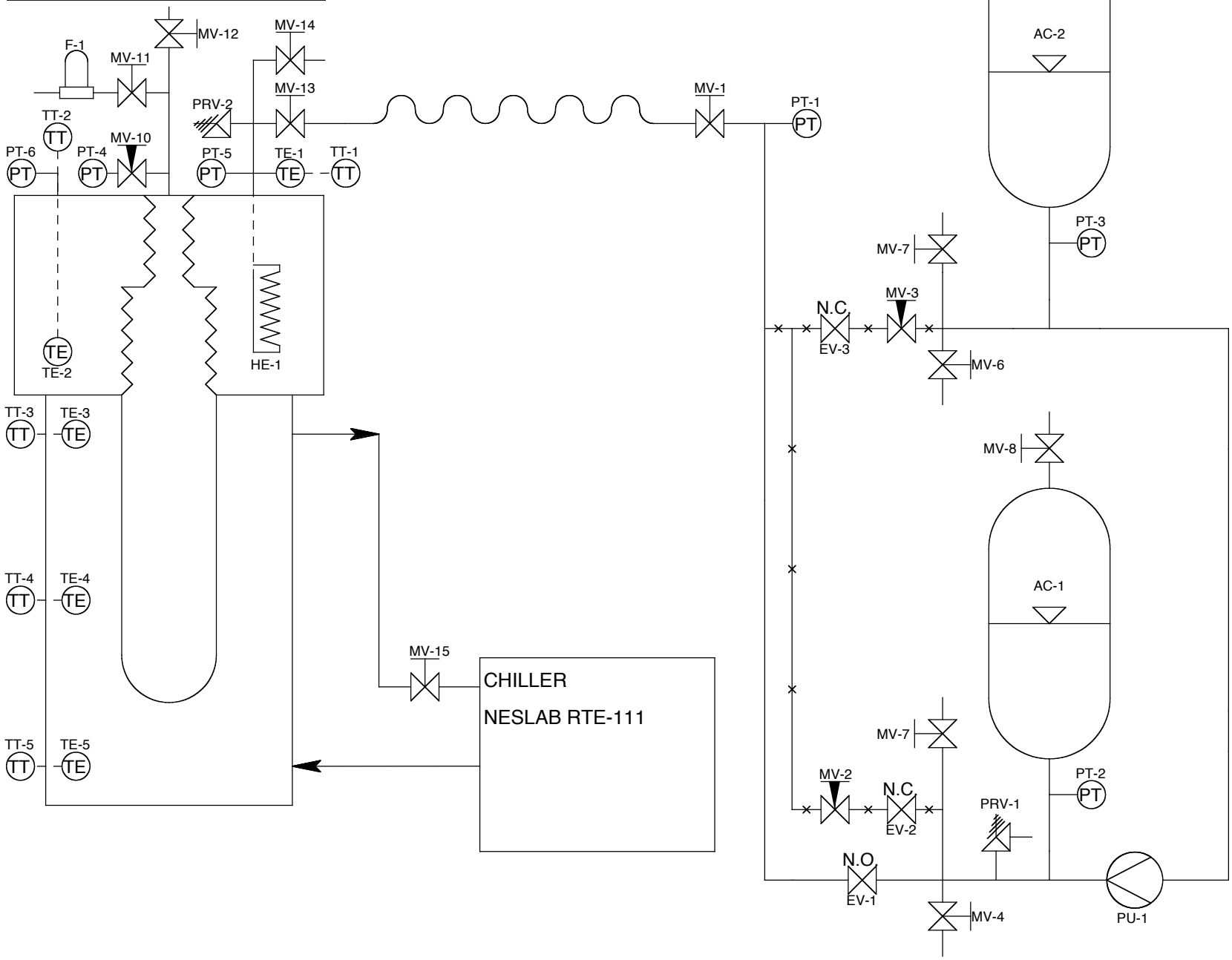
C. E. Dahl