CIRTE Piping & Instrumentation

Version 1.1, 01/17/2012
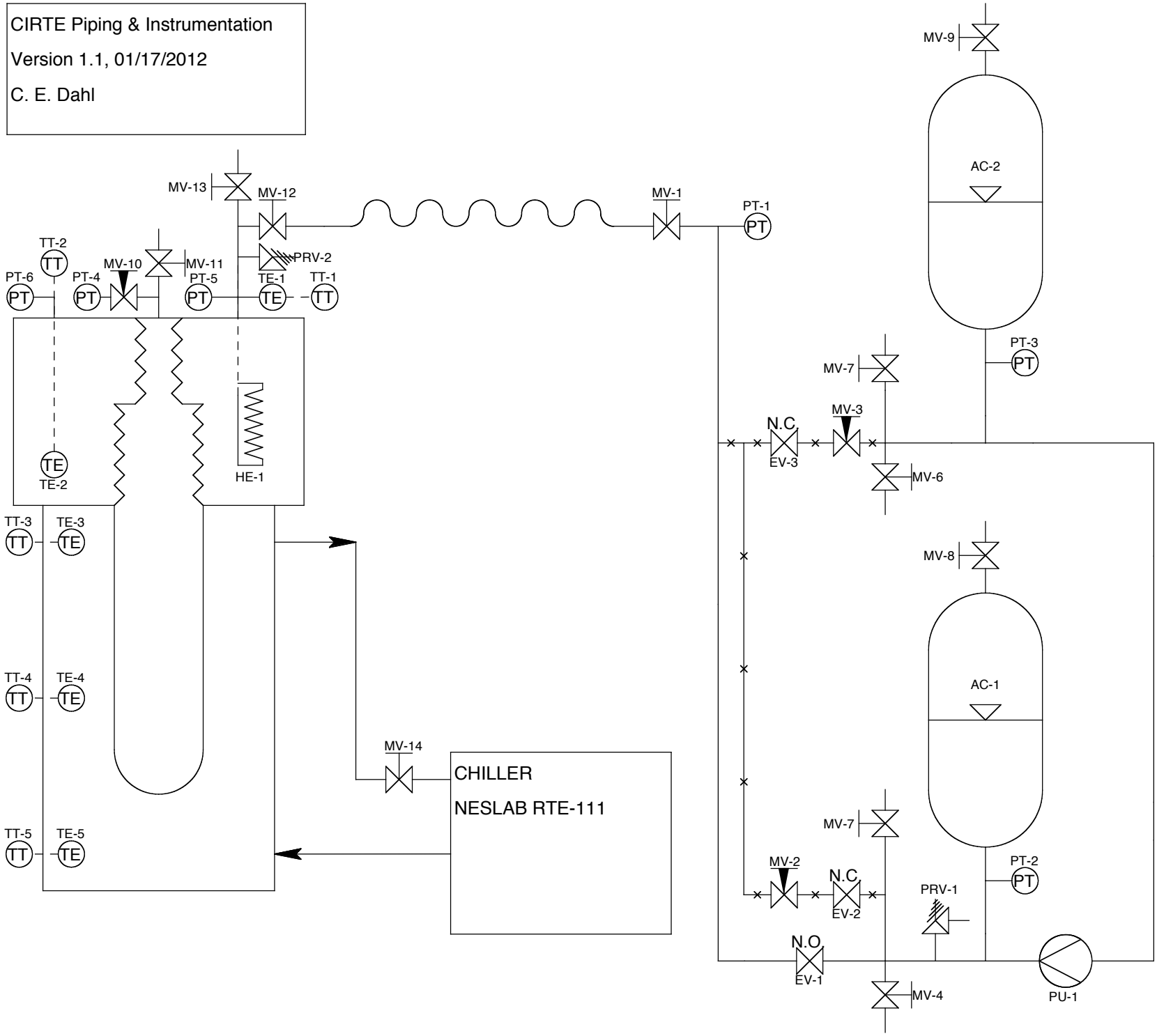
C. E. Dahl