FERMILAB
ENGINEERING NOTE

SECTION	PROJECT	SERIAL-CATEGORY	PAGE

SUBJECT: COUPP-2L PROCESS FLOW DIAGRAM

NAME: M. CRISLER

DATE: 3/29/10
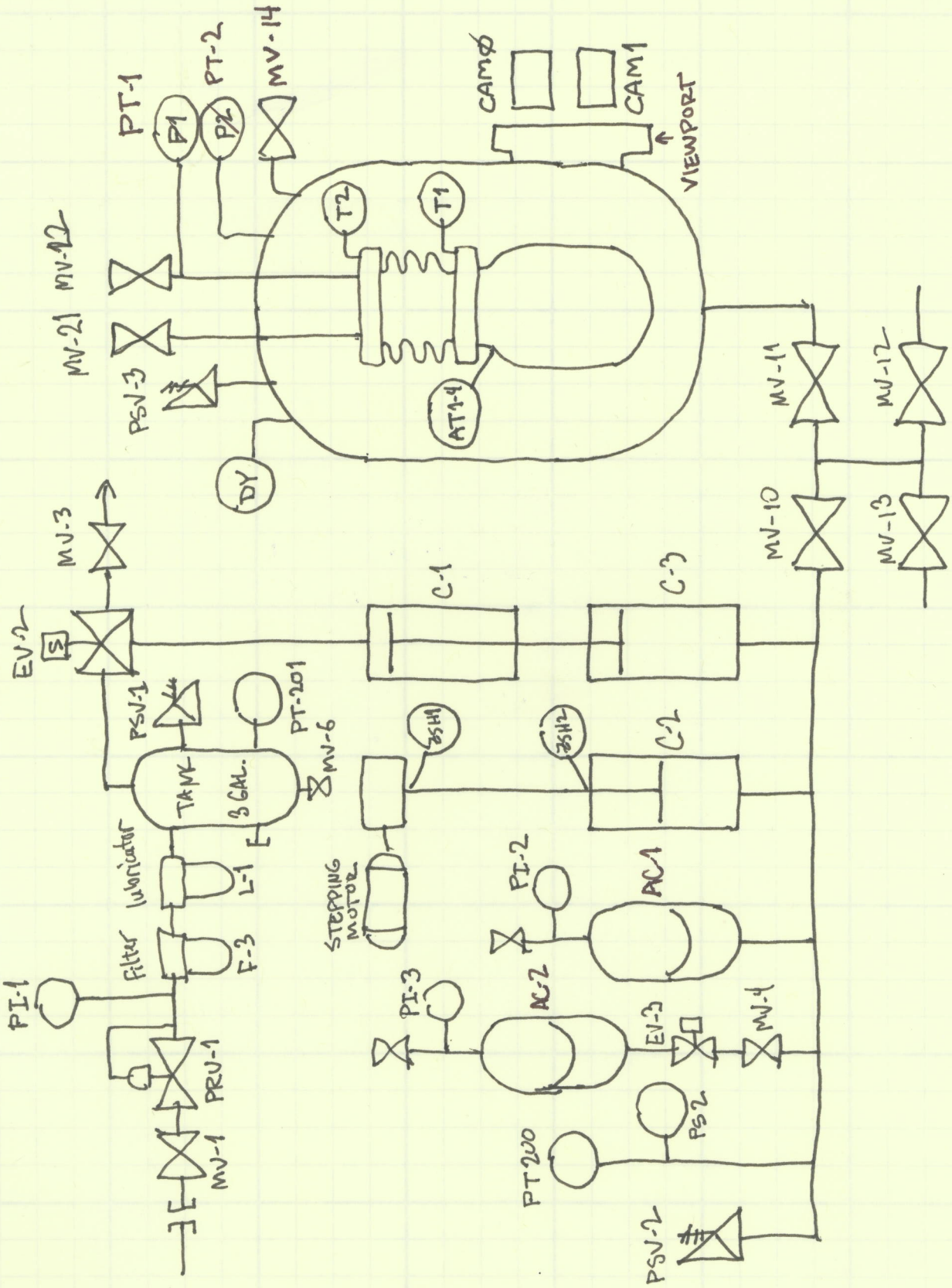
REVISION DATE: