FERMILAB
ENGINEERING NOTE

SECTION	PROJECT	SERIAL-CATEGORY	PAGE
PPD/MD	COUPP		

SUBJECT

NAME: RUSS RUCINSKI

DATE: 9-12-07
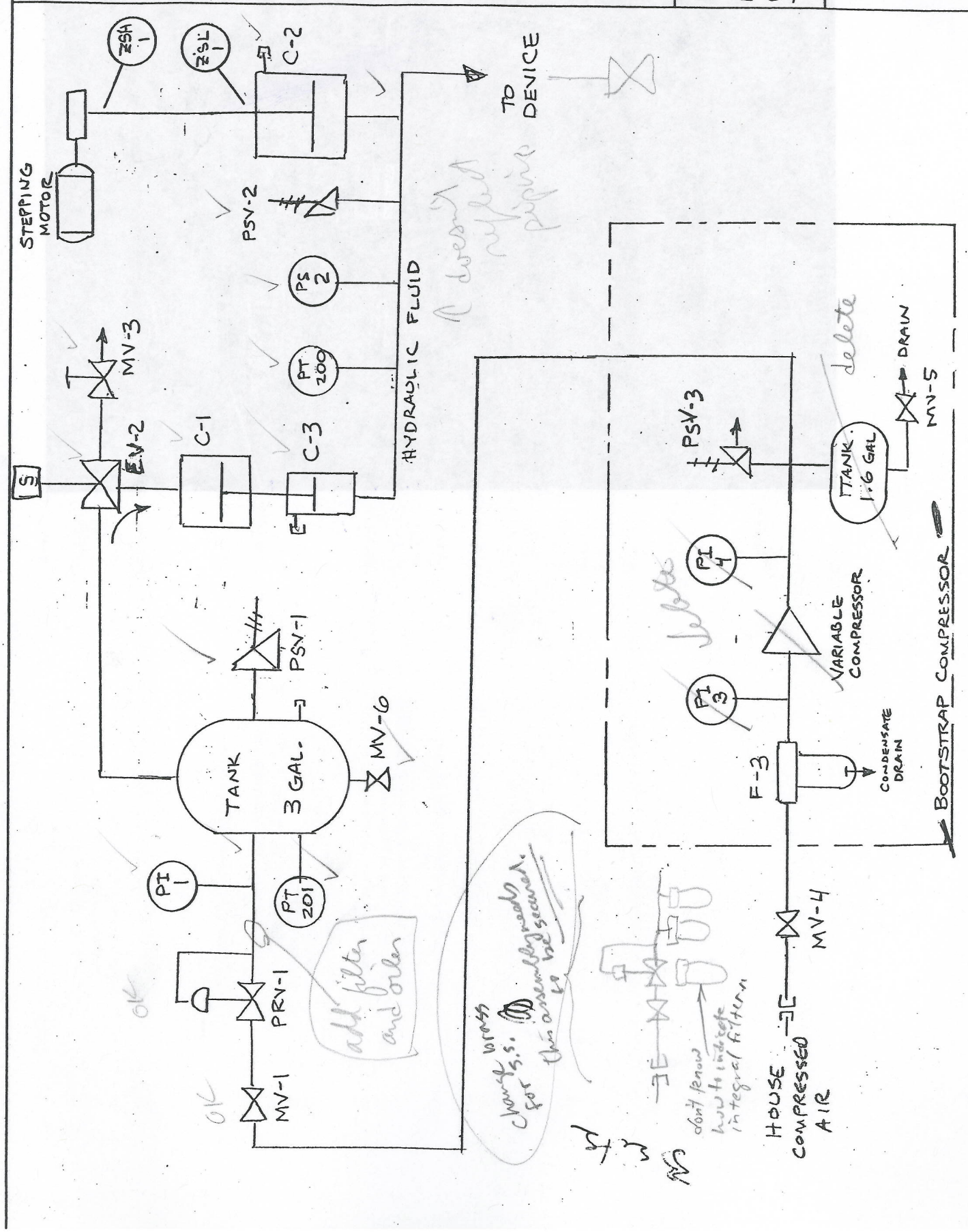
REVISION DATE