BILL OF MATERIAL

ITEM	QTY.	DESCRIPTION	SPEC.

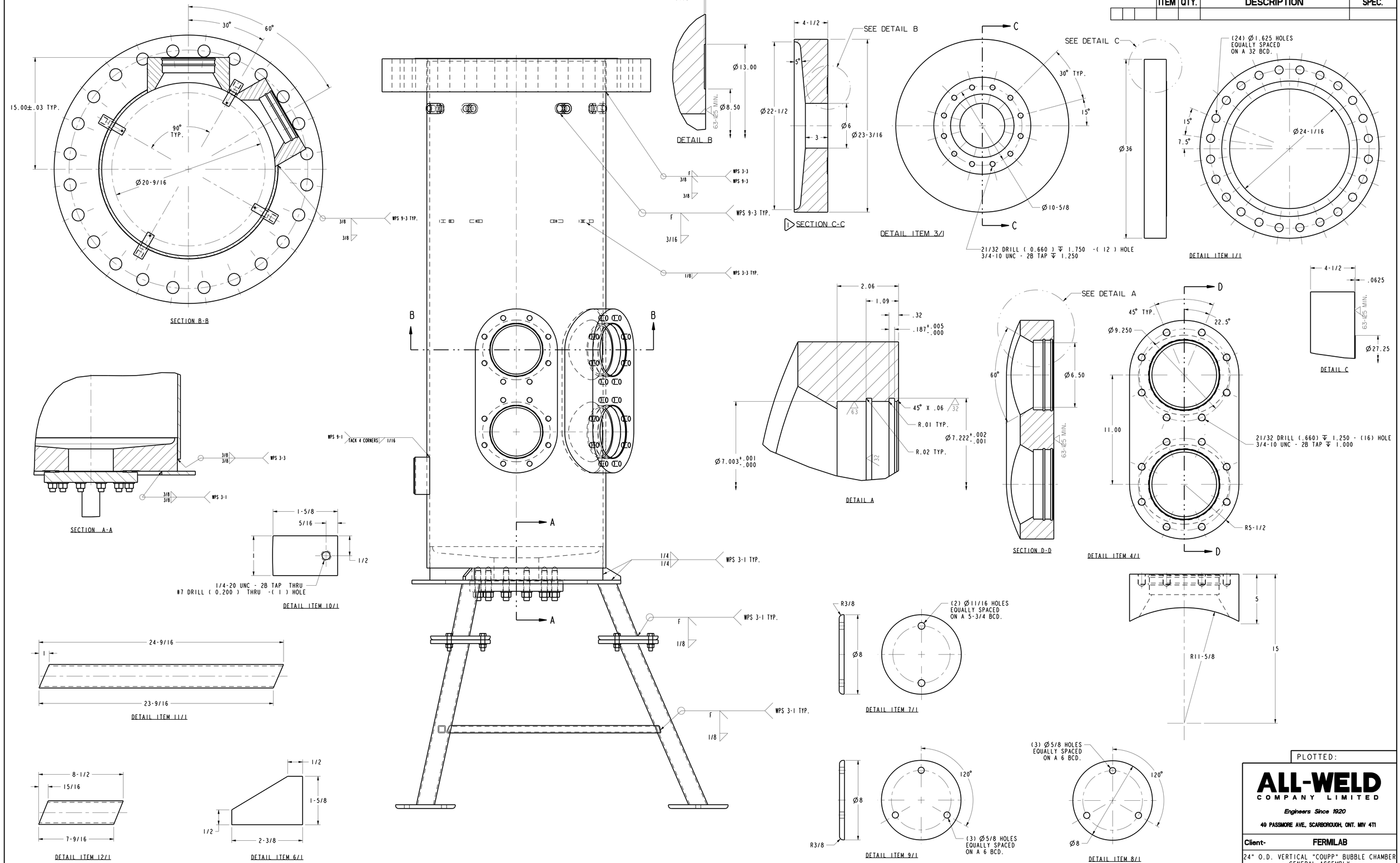

PLOTTED:

ALL-WELD
COMPANY LIMITED
Engineers Since 1920
49 PASSMORE AVE., SCARBOROUGH, ONT. M1V 4T1

Client- **FERMILAB**

24" O.D. VERTICAL "COUPP" BUBBLE CHAMBER
GENERAL ASSEMBLY
TAG AS: V2

No.	Revision	Date	By
1	REVISED AS PER MEETING WITH CUSTOMER.	MAR. 06 2012	KTC

Drawn NR	Chk'd	Date 02/17/12	
W.O. 9833Q	Dwg. 9833-2	Rev. 1	

This drawing is the property of ALL-Weld Company Ltd. and may not be reproduced or disclosed to others without permission in writing.