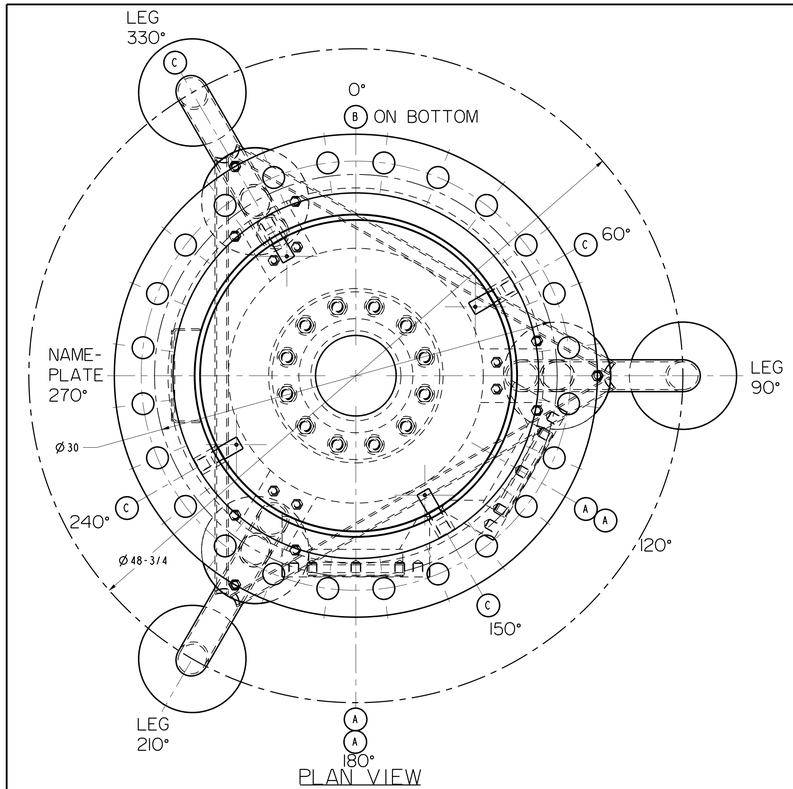

PLAN VIEW
(TRUE ORIENTATION)

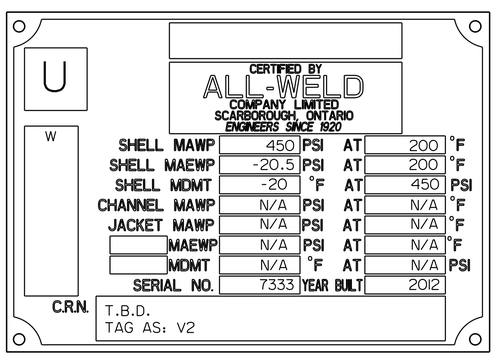

ASME NAMEPLATE STAMPING

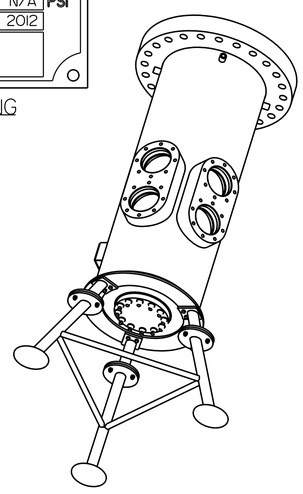

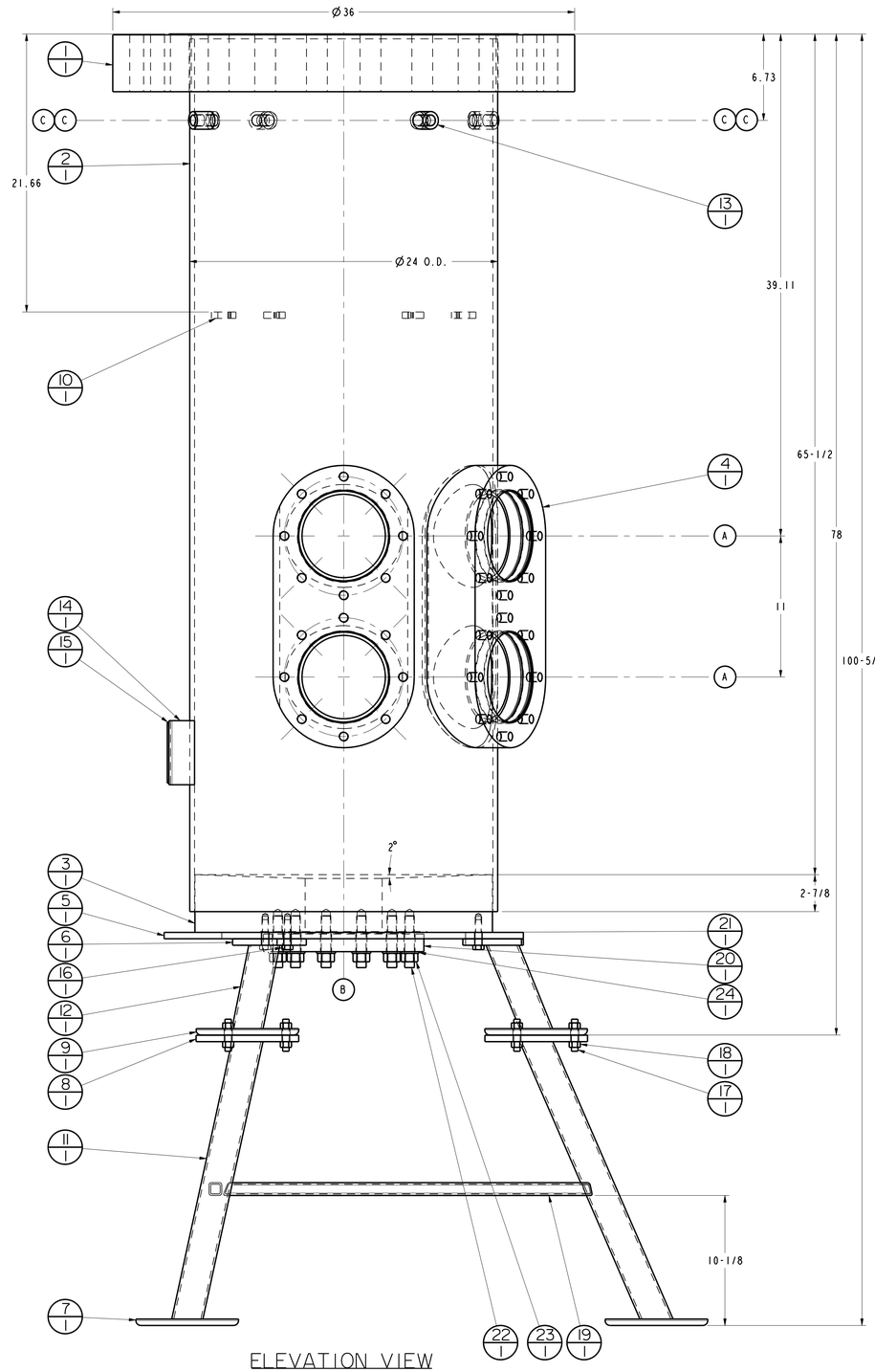

ELEVATION VIEW
(VIEW FROM 180°)

ITEM	SIZE	REQ'D	NECK	FLG.	RATE	SERVICE
C	3/4"	4	-	-	3000#	-
B	6"	1	-	-	-	-
A	7"	4	-	-	-	-

NOZZLE SCHEDULE

BILL OF MATERIAL

ITEM	QTY.	DESCRIPTION	SPEC.
1/1	1	4-1/2" PLATE, 36" O.D. x 24-1/16" I.D. 24" 300# FLANGE PATTERN	SA-240 316L
2/1	1	3/8" PLATE x 68" LONG (ROLL TO 24" O.D.)	SA-240 316L
3/1	1	4-1/2" PLATE, 23-3/16" O.D. x 6" I.D. SEE MACHINING DETAIL	SA-240 316L
4/1	2	4-1/2" PLATE 11" x 22" LONG SEE MACHINING DETAIL	SA-240 316L
5/1	1	1/2" PLATE, 28" O.D. x 19" I.D. SEE DETAIL	SA-240 304
6/1	3	1/2" PLATE, 4" x 4-3/4" LONG SEE DETAIL	SA-240 304
7/1	3	1/2" PLATE x 8" O.D.	SA-240 304
8/1	3	1/2" PLATE x 8" O.D.	SA-240 304
9/1	3	1/2" PLATE x 8" O.D.	SA-240 304
10/1	4	1/2" PLATE, 1" x 1-5/8" LONG	SA-240 316L
11/1	3	2" SCH. 40 PIPE x 24" LONG	SA-312 TP304
12/1	3	2" SCH. 40 PIPE x 7-1/2" LONG	SA-312 TP304
13/1	4	3/4" FULL COUPLING 3000# NPT	SA-182 F316L
14/1	1	#1 NAMEPLATE BRACKET "A" 11 GAUGE 5" x 11"	SA240-304 SA240-316
15/1	1	AWC NAMEPLATE C/W (4) TAP SCREWS	S.S.
16/1	6	1/2" - 13 UNC HEX. HEAD BOLT x 2" LONG	SA-193 B8
17/1	9	1/2" UNC - 13 STUD x 2-1/2" LONG	SA-193 B8
18/1	18	1/2" - 13 UNC HEX. NUT	S.S.
19/1	3	1" x 1" x 1/8" THICK SQUARE TUBING x 33" LONG TRIM TO SUIT	304 S.S.
20/1	1	6" 300# ANSI RF BLIND FLANGE	SA-182 F316L
21/1	1	6"-150# SPIRAL-WOUND 0.175" THICK GASKET, STYLE CGI	NON ASBESTOS
22/1	12	3/4" - 10 UNC STUD x 4" LONG	SA-193 B8
23/1	12	3/4" - 10 UNC HEX. LOCK NUT	SA-194-8
24/1	12	3/4" DIAMETER WASHER	S.S.

GENERAL NOTES:

1. MATERIALS OF CONSTRUCTION: OUTOKUMPO STAINLESS STEEL 316L UNLESS OTHERWISE APPROVED.
2. SURFACE FINISH : INTERNAL SURFACES
   EXTERNAL - AS WELDED, CLEANED AND DESCALED.
   THE COMPLETE VESSEL WILL BE PASSIVATED AS PER ONE OF THE TECHNIQUES RECOMMENDED BY ASTM A967-99 OR EQUIV.
3. PNEUMATIC TESTING SHALL TAKE PLACE AFTER THE HYDROTESTING IS COMPLETED. THE VESSEL WILL BE PRESSURIZED TO 250 PSIG WITH AN INERT GAS AND LEAK CHECKED USING "SNOOP" OR AN EQUIV. PRODUCT. THE PRESSURE OF 250 PSIG SHALL BE HELD FOR A MINIMUM OF (8) HOURS WITH NO MORE THAN A 1% PRESSURE DROP.
4. SEE DRAWING 9833-2 FOR MACHINING AND WELDING DETAILS.
5. THE VESSEL SHALL BE PREPARED FOR SHIPPING BY INSTALLING A BLIND FLANGE OR PLUG OVER EVERY VESSEL PORT AND INSTALLING SHIPPING RESTRAINTS AS NEEDED. THE OUTER VESSEL SHALL BE WRAPPED IN PLASTIC TO KEEP IT CLEAN DURING SHIPPING.

DESIGN DATA:

DESIGNED AND FABRICATED TO ASME SECTION VIII, DIV. 1 UW-12(c) 2010 EDITION. 2011 ADDENDA AND CSA B51-2008.

DESIGN PRESSURE:	450 PSIG
DESIGN TEMPERATURE:	200 °F
MDMT:	-20 °F @ 450 PSIG
MAWP:	450 PSIG @ 200 °F
M.A.E.W.P.	20.5 PSIG @ 200 °F
CORROSION ALLOWANCE:	NONE
SHOP HYDROTEST PRESSURE: AS PER UG-99(b)(NOTE 34)	585 PSIG @ 68 °F
RADIOGRAPHY:	SPOT
IMPACT TESTING:	NOT REQUIRED PER UHA-51(d)(1)(a)
PWHT:	NONE
LOCATION OF INSTALLATION:	LIVELY, ONTARIO
SERIAL NO.:	7333
C.R.N.:	T.B.D.
SERVICE:	WATER
VOLUME:	126 U.S. GALLONS
WEIGHT:	APPROX. 2,200 LBS (EMPTY) APPROX. 3,250 (FULL WITH WATER)

PLOTTED:

ALL-WELD
COMPANY LIMITED
Engineers Since 1920
49 PASSMORE AVE., SCARBOROUGH, ONT. M1V 4T1

Client- FERMILAB

24" O.D. VERTICAL "COUPP" BUBBLE CHAMBER
GENERAL ASSEMBLY
TAG AS: V2

No.	Revision	Date	By
0	:	-	-

Drawn KTC | Chk'd | Date 02/07/12
W.O. 9833Q | Dwg. 9833-1 | Rev. 0

This drawing is the property of ALL-Weld Company Ltd. and may not be reproduced or disclosed to others without permission in writing.