REV	DESCRIPTION	DRAWN	DATE
		APPROVED	DATE

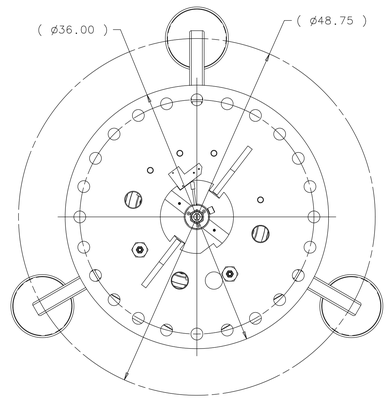

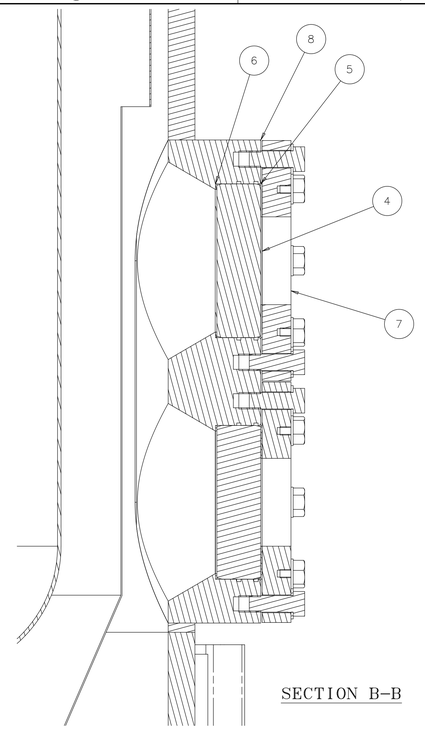

SECTION B-B

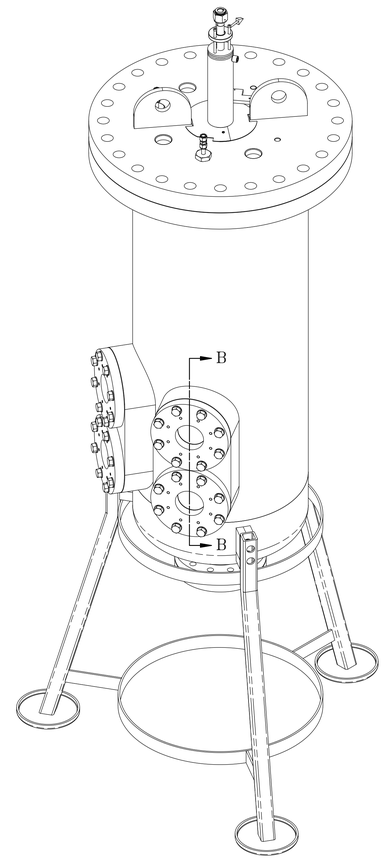

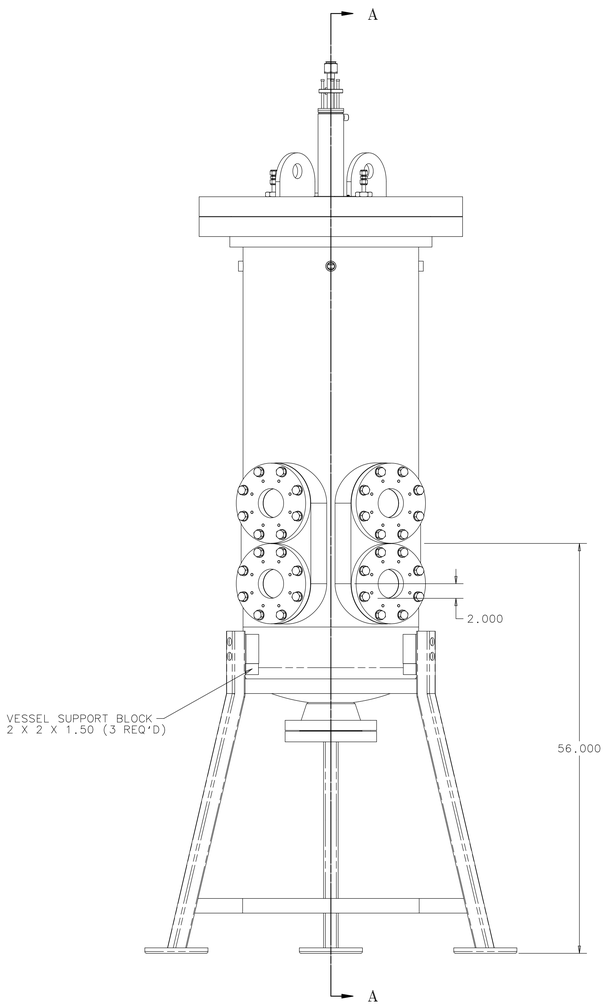

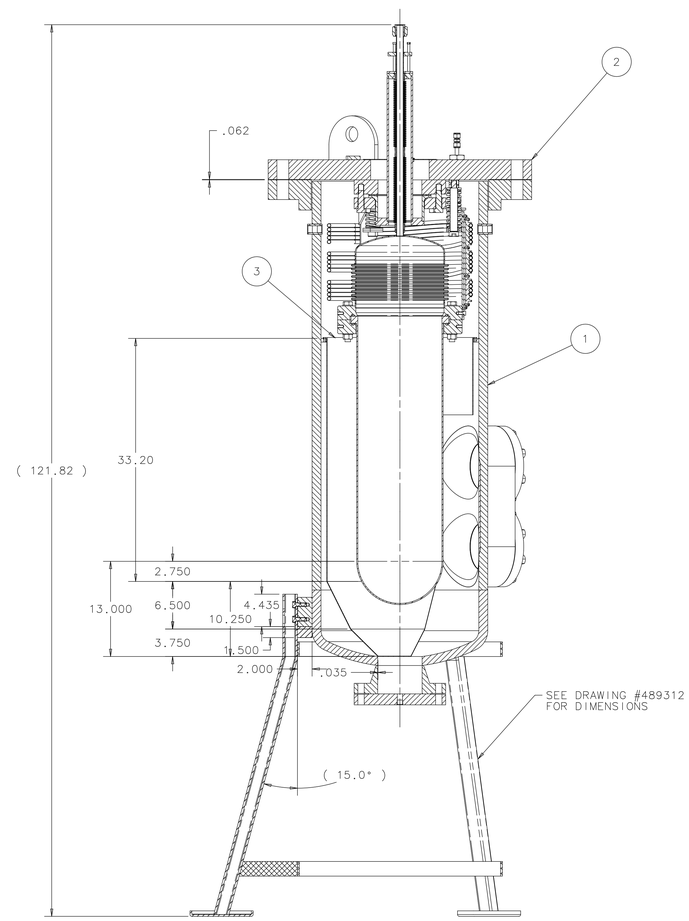

SECTION A-A

ITEM	PART NO.	DESCRIPTION OR SIZE	QTY.
8	COML	1/16 TEFLON SHEET	AS REQD
7	MB-489313	FLANGE , OUTER - V2	4
6	MB-489316	TEFLON WASHER - INNER	4
5	MB-489317	TEFLON WASHER - OUTER	4
4	MB-489314	SIGHT GLASS	4
3	MD-489339	LIGHT RETRO REFLECTOR	1
2	ME-466178	HPV-30L INNER ASSY	1
1	MD-489312	EXTERNAL PRESSURE VESSEL-V2	1

PARTS LIST

UNLESS OTHERWISE SPECIFIED			ORIGINATOR	H.CEASE	02-NOV-2011
.XX	.XXX	ANGLES	DRAWN	G.SMITH	02-NOV-2011
± .06	± ---	± ---	CHECKED		
			APPROVED		
			USED ON		
			MATERIAL	SEE PARTS LIST ABOVE	

1. BREAK ALL SHARP EDGES .015 MAX.
2. DO NOT SCALE DRAWING.
3. DIMENSIONS BASED UPON ASME Y14.5M-1994
4. MAX. ALL MACH. SURFACES 250
5. DRAWING UNITS: U.S. INCH

FERMI NATIONAL ACCELERATOR LABORATORY
UNITED STATES DEPARTMENT OF ENERGY

MECHANICAL/DETECTORS
COUPP BUBBLE CHAMBER
COUPP VESSEL & STAND FULL ASSY

SCALE	DRAWING NUMBER	SHEET	REV
1:8 & AS NOTED	9213.400-ME-489386	1 OF 1	

CREATED WITH : Ideas12NXSeries GROUP: PPD/MECHANICAL DEPARTMENT