REV	DESCRIPTION	DRAWN	DATE
		APPROVED	DATE

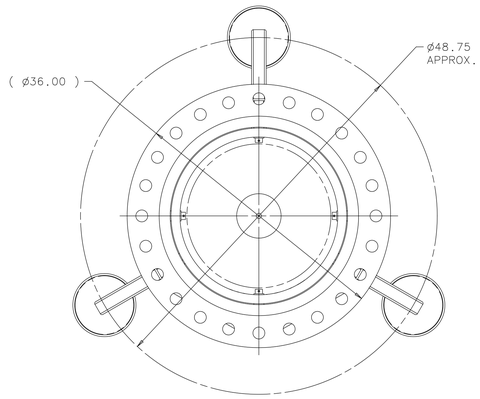

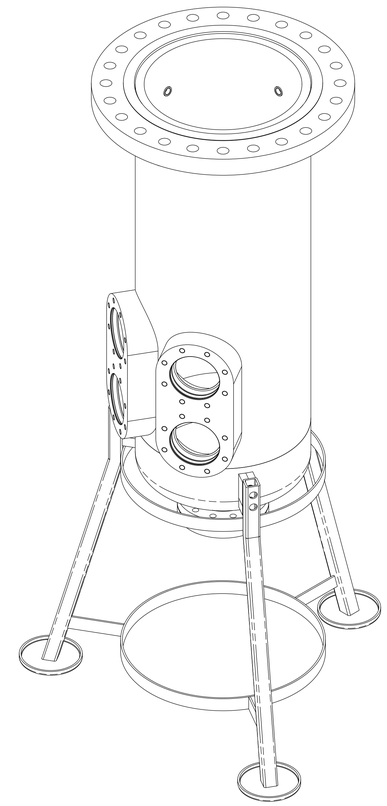

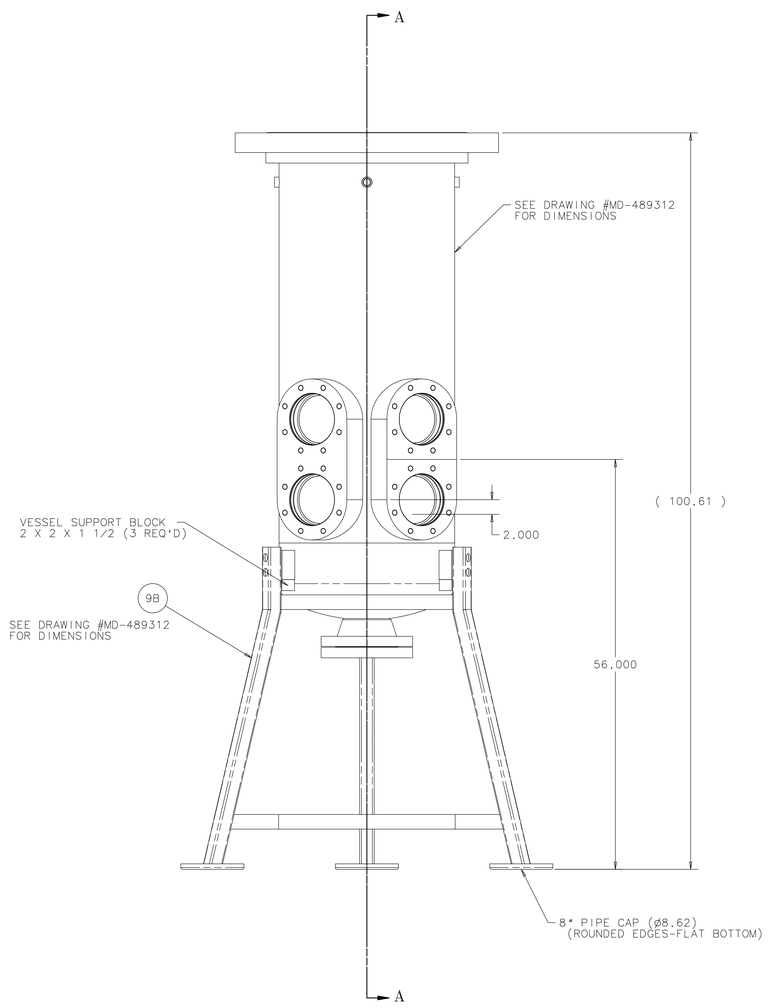

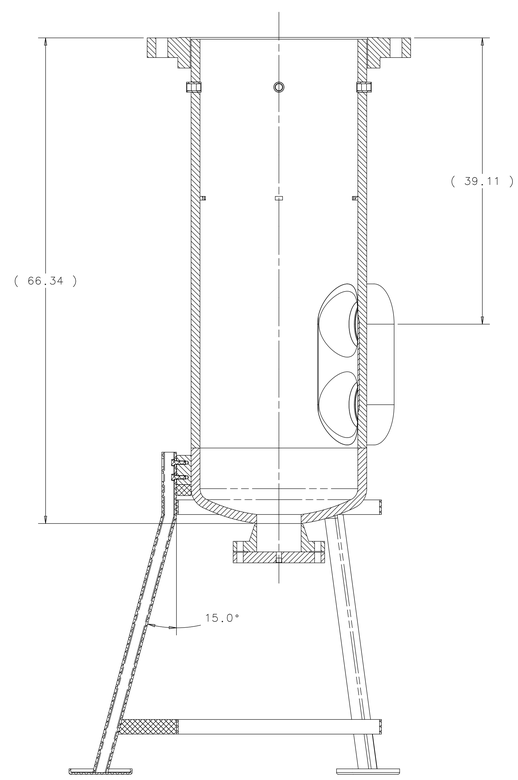

SECTION A-A

UNLESS OTHERWISE SPECIFIED			ORIGINATOR	H.CEASE	31-OCT-2011
.XX	.XXX	ANGLES	DRAWN	G.SMITH	31-OCT-2011
± .06	± .015	± .25°	CHECKED		
			APPROVED		

1. BREAK ALL SHARP EDGES .015 MAX.
2. DO NOT SCALE DRAWING.
3. DIMENSIONS BASED UPON ASME Y14.5M-1994
4. MAX. ALL MACH. SURFACES 250
5. DRAWING UNITS: U.S. INCH

USED ON

MATERIAL
SEE DRAWING MD-489312 FOR PARTS LIST

FERMI NATIONAL ACCELERATOR LABORATORY
UNITED STATES DEPARTMENT OF ENERGY

MECHANICAL/DETECTORS
COUPP BUBBLE CHAMBER
EXTERNAL PRESSURE VESSEL-V2 TALL

SCALE	DRAWING NUMBER	SHEET	REV
1:8	9213.400-ME-489383	1 OF 1	

CREATED WITH : Ideas12NXSeries GROUP: PPD/MECHANICAL DEPARTMENT