REV	DESCRIPTION	DRAWN / APPROVED	DATE / DATE
A	REVISED "NOTES". REVISED MAT'L. ITEMS 9,10 & 11. 2ND SET OF REMOVABLE LEGS ADDED (SEE DWG# MD-489312)	B CYKO/G SMITH	29-SEP-2011 / 31-OCT-2011

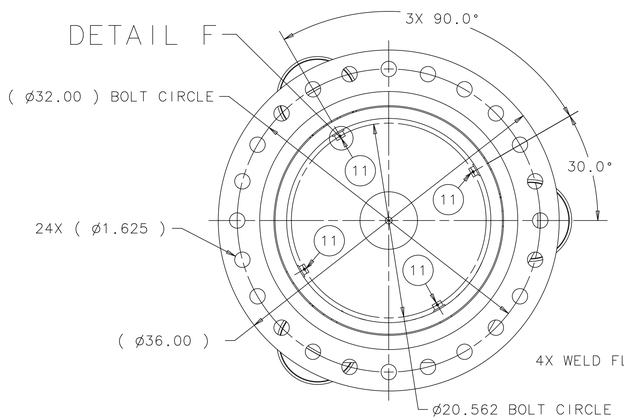

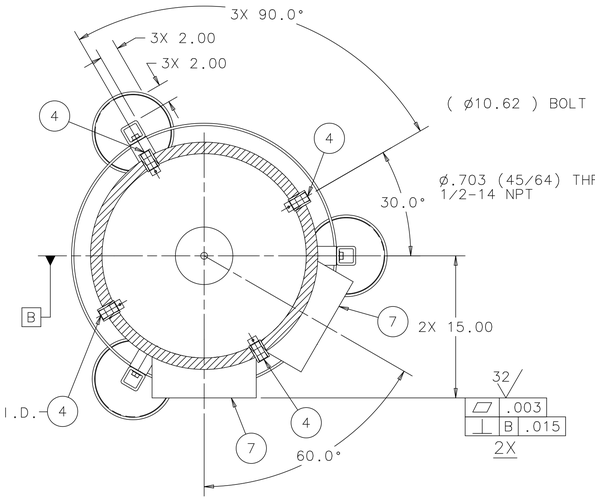

SECTION B-B

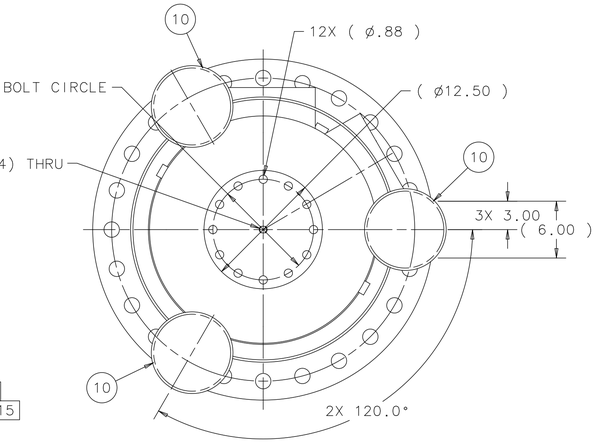

VIEW C-C

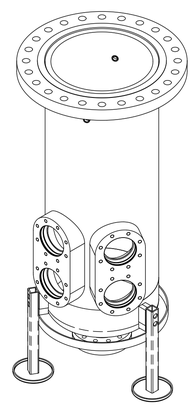

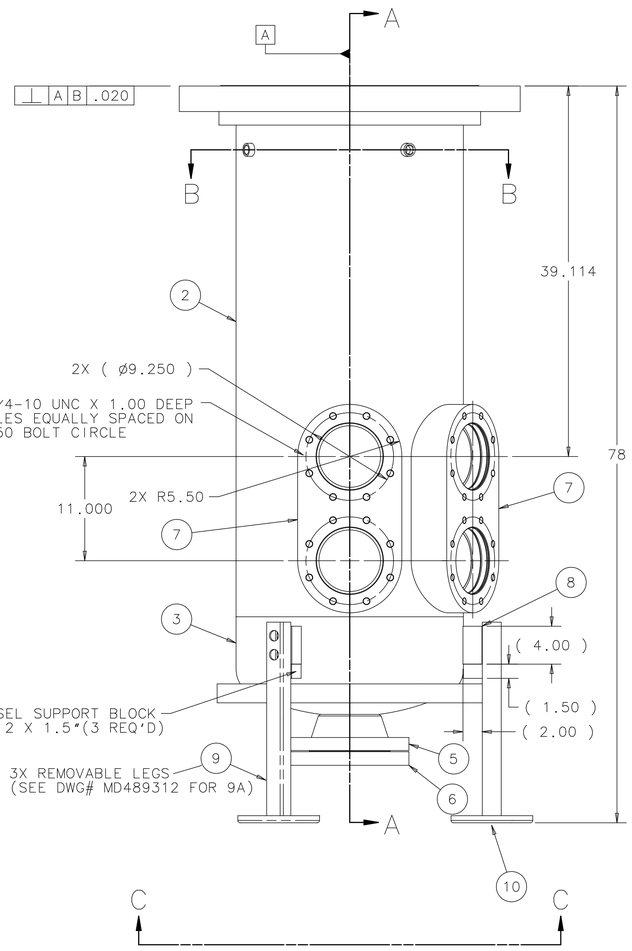

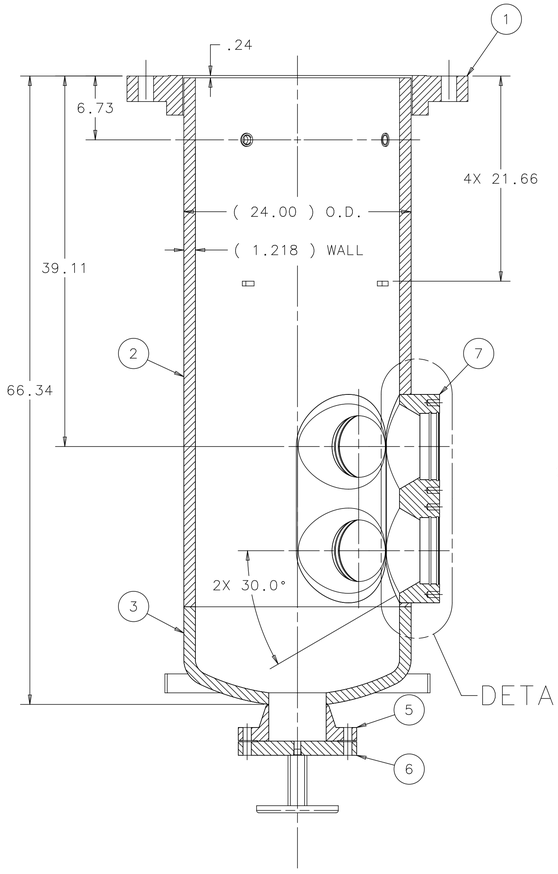

SECTION A-A

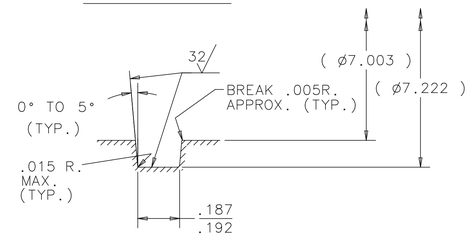

DETAIL D

4X O-RING GROOVE
(NOT TO SCALE)

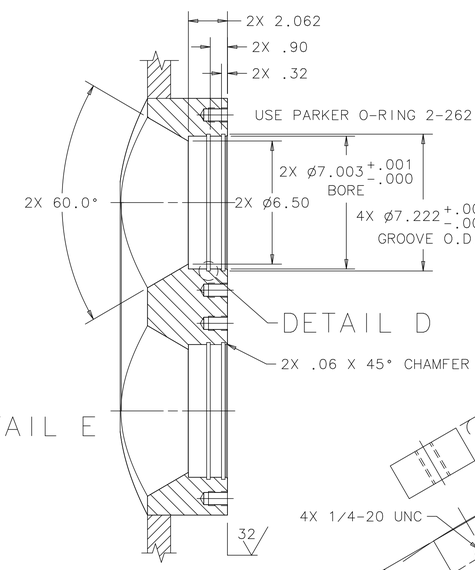

DETAIL E

SCALE: 1:4

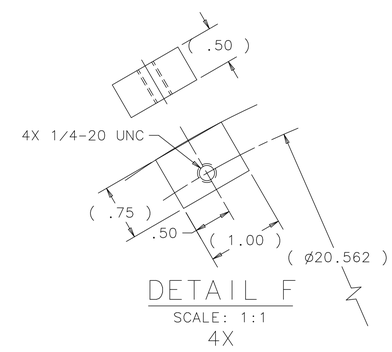

DETAIL F

SCALE: 1:1
4X

A NOTES:

1. ALL MATERIALS TO BE 300 SERIES STAINLESS STEEL UNLESS OTHERWISE SPECIFIED. SEE ENGINEERING SPECIFICATIONS FOR TYPE.

A

ITEM	PART NO.	DESCRIPTION OR SIZE	QTY.
11	COML.	PLATE, 1.00 X .75 X .50 THK.	4
10	COML.	8" PIPE CAP (FLAT BOTTOM)	3
9&9A	COML.	TUBING, SQUARE, 2 X 2 X 1/4	3
8	COML.	RECTANGLE, 2.00 X 2.00 X 4.00	3
7	———	DOUBLE FLANGE	2
6	COML.	FLANGE, BLIND, 6" ANSI,CLASS 300	1
5	COML.	FLANGE, WELDING NECK, 6" ANSI,CLASS 300	1
4	COML.	COUPLING, FULL, 3/4" NPT, CLASS 3000	4
3	COML.	PIPE CAP, 24" IPS, SCH. 80	1
2	COML.	PIPE, 24" IPS, SCH. 80	1
1	COML.	FLANGE, SLIP-ON, 24" ANSI CLASS 300	1

PARTS LIST

ITEM	PART NO.	DESCRIPTION OR SIZE	QTY.

PARTS LIST

UNLESS OTHERWISE SPECIFIED					
.XX	.XXX	ANGLES	ORIGINATOR	H.CEASE	25-AUG-2011
± .06	± .015	± .25°	DRAWN	W.CYKO	25-AUG-2011
			CHECKED	J.RAUCH	09-SEP-2011
			APPROVED	H.CEASE	09-SEP-2011
			USED ON		
			MATERIAL	SEE PARTS LIST ABOVE	

1. BREAK ALL SHARP EDGES .015 MAX.
2. DO NOT SCALE DRAWING.
3. DIMENSIONS BASED UPON ASME Y14.5M-1994
4. MAX. ALL MACH. SURFACES 250
5. DRAWING UNITS: U.S. INCH

FERMI NATIONAL ACCELERATOR LABORATORY
UNITED STATES DEPARTMENT OF ENERGY

MECHANICAL/DETECTORS COUPP BUBBLE CHAMBER EXTERNAL PRESSURE VESSEL - V2

SCALE	DRAWING NUMBER	SHEET	REV
1:8	9213.400-MD-489312	1 OF 1	A

CREATED WITH : Ideas12NXSeries | GROUP: PPD/MECHANICAL DEPARTMENT