All-Weld Company Limited

49 Passmore Avenue,

Toronto, Ontario

M1V 4T1

www.allweld.ca

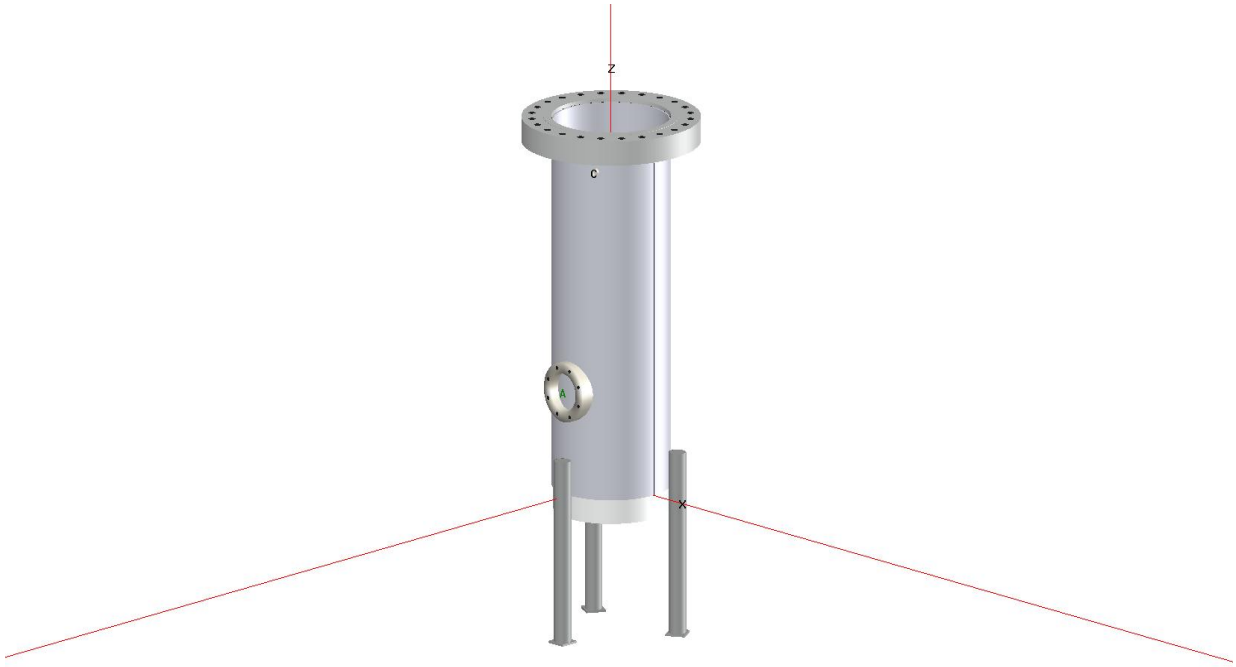

COMPRESS Pressure Vessel Design Calculations

Item: 24" OD Vertical COUPP Bubble Chamber
Vessel No: V2
Customer: Fermi National Accelerator Laboratory
Contract: PO #604075
Designer: Todd Clark, P. Eng.
Date: Monday, March 05, 2012

Table Of Contents

1. Nozzle Schedule
2. Nozzle Summary
3. Pressure Summary
4. Revision History
5. Settings Summary
6. Thickness Summary
7. Weight Summary
8. Long Seam Summary
9. Hydrostatic Test
10. Vacuum Summary
11. Engineering Notes
12. 24 OD Shell
13. 24 Body Flange
14. Nozzle A (A)
15. Nozzle C (C)
16. Legs #1
17. Welded Cover

Nozzle Schedule

Nozzle mark	Service	Size	Materials								
			Nozzle	Impact	Norm	Fine Grain	Pad	Impact	Norm	Fine Grain	Flange
A	Nozzle A	7.00 IDx2.00	SA-240 316L	No	No	No	N/A	N/A	N/A	N/A	N/A
C	Nozzle C	NPS 0.75 Class 3000 - threaded	SA-182 F316 <= 5	No	No	No	N/A	N/A	N/A	N/A	N/A
N3	Nozzle #3	6.00 IDx3.25	SA-240 316	No	No	No	N/A	N/A	N/A	N/A	N/A

Nozzle Summary

Nozzle mark	OD (in)	t_n (in)	Req t_n (in)	A_1?	A_2?	Shell			Reinforcement Pad		Corr (in)	A_a/A_r (%)
						Nom t (in)	Design t (in)	User t (in)	Width (in)	t_{pad} (in)		
A	11	1.9985	0.3281	Yes	Yes	0.375	0.2676		N/A	N/A	0	100.0
C	1.375	0.1625	0.1125	Yes	Yes	0.375	N/A		N/A	N/A	0	Exempt
N3	12.5	3.25	0.774	Yes	Yes	4.5*	N/A		N/A	N/A	0	Exempt

t_n: Nozzle thickness
Req t_n: Nozzle thickness required per UG-45/UG-16
Nom t: Vessel wall thickness
Design t: Required vessel wall thickness due to pressure + corrosion allowance per UG-37
User t: Local vessel wall thickness (near opening)
A_a: Area available per UG-37, governing condition
A_r: Area required per UG-37, governing condition
Corr: Corrosion allowance on nozzle wall
* Head minimum thickness after forming

Pressure Summary for Chamber bounded by Welded Cover and Top of vessel

Identifier	P Design (psi)	T Design (°F)	MAWP (psi)	MAP (psi)	MAEP (psi)	T_e external (°F)	MDMT (°F)	MDMT Exemption		Impact Tested
24 OD Shell	450	200	537.97	537.97	188.15	200	-320	Note 1		No
Welded Cover	450	200	632.91	632.91	1,251.2	200	-320	Note 1		No
24 Body Flange	450	200	460.41	460.41	760.7	200	-55	Note 2		No
Legs #1	450	200	450	N/A	N/A	N/A	N/A	N/A		N/A
Nozzle A (A)	450	200	575.52	575.52	188.15	200	-320	Nozzle	N/A	No
								Pad	Note 1	No
Nozzle C (C)	450	200	632.92	632.92	188.15	200	-320	Note 3		No
Nozzle #3 (N3)	450	200	632.91	632.91	1,251.2	200	-320	Nozzle	N/A	No
								Pad	Note 4	No

Chamber design MDMT is -20 °F
Chamber rated MDMT is -55 °F @ 450 psi
Chamber MAWP was used in the MDMT determination

Chamber MAWP hot & corroded is 450 psi @ 200 °F
This is due to the MAWP limit set in the Calculations tab of the Set Mode dialog.

Chamber MAP cold & new is 460.41 psi @ 68 °F

Chamber MAEP is 188.15 psi @ 200 °F
Vacuum rings did not govern the external pressure rating.

Notes for MDMT Rating:

Note #	Exemption	Details
1.	Rated MDMT per UHA-51(d)(1)(a) = -320 °F	
2.	Flange Rated MDMT per UHA-51(d)(1)(a) = -320 °F	Bolts rated MDMT per Fig UCS-66 note (c) = -55 °F
3.	Impact test exempt per UHA-51(g)(coincident ratio = 0.0737)	
4.	Impact test exempt per UHA-51(g)(coincident ratio = 0.1678)	

Design notes are available on the Settings Summary page.

Revision History

No.	Date	Operator	Notes
0	12/ 7/2011	todd.clark	New vessel created ASME Section VIII Division 1 [COMPRESS Build 7140]

Settings Summary

COMPRESS 2012 Build 7200

Units: U.S. Customary

Datum Line Location: 0.00" from bottom seam

Design

ASME Section VIII Division 1, 2010 Edition

Design or Rating:	Get Thickness from Pressure
Minimum thickness:	0.0625" per UG-16(b)
Design for cold shut down only:	No
Design for lethal service (full radiography required):	No
User has limited MAWP to:	450 psi
Design nozzles for:	Design P, find nozzle MAWP and MAP
Corrosion weight loss:	100% of theoretical loss
UG-23 Stress Increase:	1.20
Skirt/legs stress increase:	1.0
Minimum nozzle projection:	1"
Juncture calculations for $\alpha > 30$ only:	No
Preheat P-No 1 Materials > 1.25&#34 and <= 1.50" thick:	No
UG-37(a) shell tr calculation considers longitudinal stress:	No

Butt welds are tapered per Figure UCS-66.3(a).

Hydro/Pneumatic Test

Shop Hydrotest Pressure:	1.3 times vessel MAWP
Test liquid specific gravity:	1.00
Maximum stress during test:	90% of yield

Required Marking - UG-116

UG-116(e) Radiography:	RT4
UG-116(f) Postweld heat treatment:	None

Code Cases\Interpretations

Use Code Case 2547:	No
Apply interpretation VIII-1-83-66:	Yes
Apply interpretation VIII-1-86-175:	Yes
Apply interpretation VIII-1-83-115:	Yes
Apply interpretation VIII-1-01-37:	Yes
No UCS-66.1 MDMT reduction:	No
No UCS-68(c) MDMT reduction:	No
Disallow UG-20(f) exemptions:	No

UG-22 Loadings

UG-22(a) Internal or External Design Pressure :	Yes
UG-22(b) Weight of the vessel and normal contents under operating or test conditions:	Yes
UG-22(c) Superimposed static reactions from weight of attached equipment (external loads):	No
UG-22(d)(2) Vessel supports such as lugs, rings, skirts, saddles and legs:	Yes
UG-22(f) Wind reactions:	No
UG-22(f) Seismic reactions:	No
UG-22(j) Test pressure and coincident static head acting during the test:	No

Note: UG-22(b),(c) and (f) loads only considered when supports are present.

Thickness Summary

Component Identifier	Material	Diameter (in)	Length (in)	Nominal t (in)	Design t (in)	Total Corrosion (in)	Joint E	Load
24 OD Shell	SA-240 316	24 OD	68	0.375	0.3144	0	0.85	Internal
Welded Cover	SA-240 316L	23.25 OD	4.5	4.5*	2.607	0	1.00	Internal

Nominal t: Vessel wall nominal thickness

Design t: Required vessel thickness due to governing loading + corrosion

Joint E: Longitudinal seam joint efficiency

* Head minimum thickness after forming

Load

internal: Circumferential stress due to internal pressure governs

external: External pressure governs

Wind: Combined longitudinal stress of pressure + weight + wind governs

Seismic: Combined longitudinal stress of pressure + weight + seismic governs

Weight Summary

Component	Weight (lb) Contributed by Vessel Elements										Surface Area ft2
	Metal New*	Metal Corroded*	Insulation	Insulation Supports	Lining	Piping + Liquid	Operating Liquid		Test Liquid		
							New	Corroded	New	Corroded	
24 OD Shell	538.4	538.4	0	0	0	0	0	0	1,055.5	1,055.5	35
Welded Cover	393.9	393.9	0	0	0	0	0	0	0.5	0.5	4
Legs #1	69.5	69.5	0	0	0	0	0	0	0	0	8
TOTAL:	**1,001.7**	**1,001.7**	**0**	**0**	**0**	**0**	**0**	**0**	**1,056.1**	**1,056.1**	**48**

* Shells with attached nozzles have weight reduced by material cut out for opening.

Component	Weight (lb) Contributed by Attachments										Surface Area ft2
	Body Flanges		Nozzles & Flanges		Packed Beds	Ladders & Platforms	Trays	Tray Supports	Rings & Clips	Vertical Loads	
	New	Corroded	New	Corroded							
24 OD Shell	740.3	740.3	52.6	52.6	0	0	0	0	0	0	4
Welded Cover	0	0	107.6	107.6	0	0	0	0	0	0	0
Legs #1	0	0	0	0	0	0	0	0	0	0	0
TOTAL:	**740.3**	**740.3**	**160.2**	**160.2**	**0**	**0**	**0**	**0**	**0**	**0**	**1**

Vessel operating weight, Corroded: 1,902 lb
Vessel operating weight, New: 1,902 lb
Vessel empty weight, Corroded: 1,902 lb
Vessel empty weight, New: 1,902 lb
Vessel test weight, New: 2,958 lb
Vessel test weight, Corroded: 2,958 lb
Vessel surface area: 48 ft^2

Vessel center of gravity location - from datum - lift condition

Vessel Lift Weight, New: 1,902 lb
Center of Gravity: 35.3374"

Vessel Capacity

Vessel Capacity** (New): 126 US gal
Vessel Capacity** (Corroded): 126 US gal
**The vessel capacity does not include volume of nozzle, piping or other attachments.

Long Seam Summary

Shell Long Seam Angles	
Component	**Seam 1**
24 OD Shell	0°

Shell Plate Lengths		
Component	**Starting Angle**	**Plate 1**
24 OD Shell	0°	74.2201"

*North is located at 0°
*Plate Lengths use the circumfrence of the vessel based on the mid diameter of the components

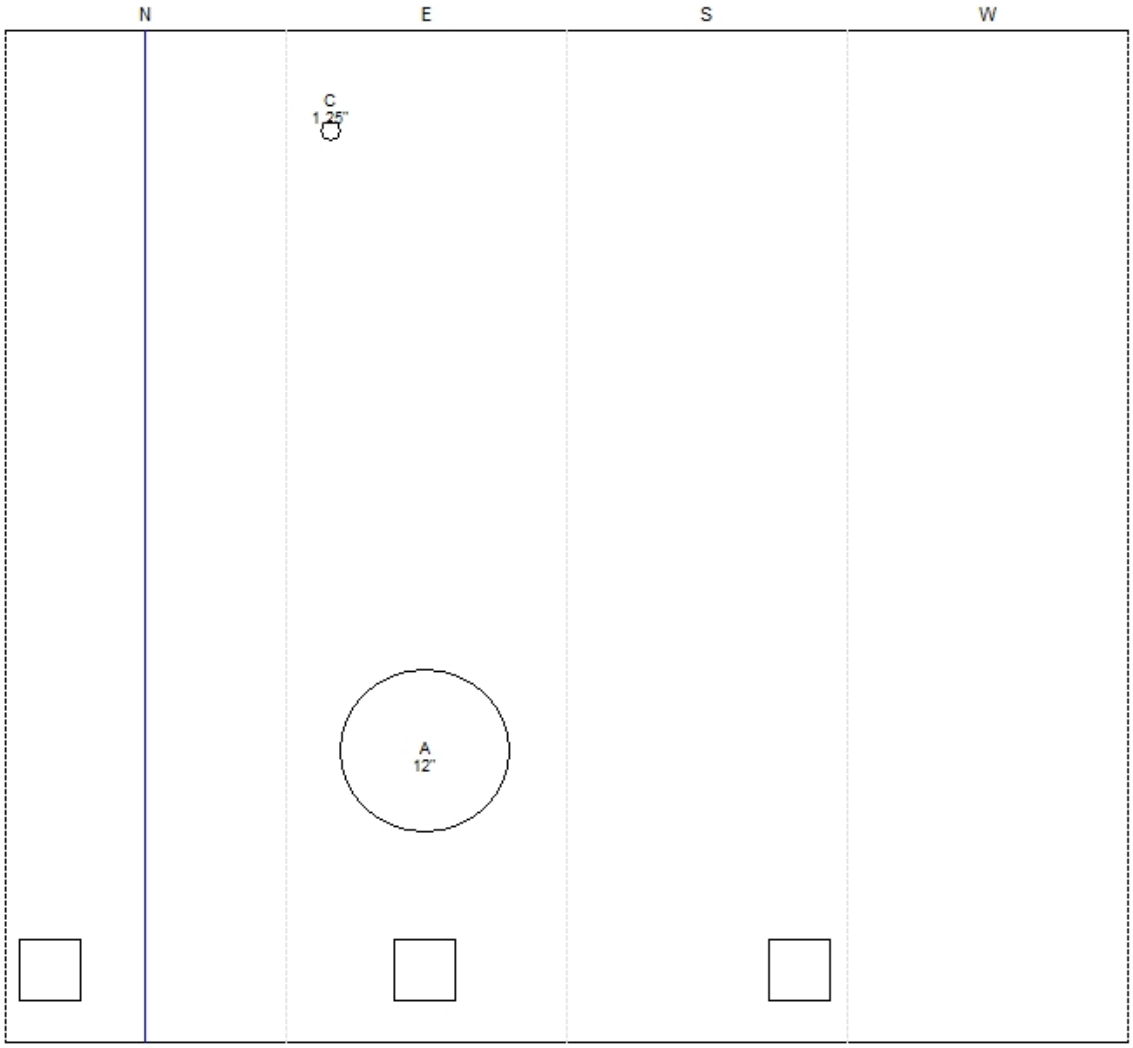

Shell Rollout

Shop test pressure determination for Chamber bounded by Welded Cover and Top of vessel based on MAWP per UG-99(b)

Shop hydrostatic test gauge pressure is 585 psi at 68 °F (the chamber MAWP = 450 psi)

The shop test is performed with the vessel in the horizontal position.

Identifier	Local test pressure psi	Test liquid static head psi	UG-99(b) stress ratio	UG-99(b) pressure factor
24 OD Shell (1)	585.853	0.853	1	1.30
24 Body Flange	585.866	0.866	1	1.30
Welded Cover	585.853	0.853	1	1.30
Nozzle #3 (N3)	585.542	0.542	1	1.30
Nozzle A (A)	585.56	0.56	1	1.30
Nozzle C (C)	585.233	0.233	1	1.30

Notes:
(1) 24 OD Shell limits the UG-99(b) stress ratio.
(2) The zero degree angular position is assumed to be up, and the test liquid height is assumed to the top-most flange.

The field test condition has not been investigated for the Chamber bounded by Welded Cover and Top of vessel.

Vacuum Summary

Component	Line of Support	Elevation above Datum (in)	Length Le (in)
-	24 Body Flange	68.6875	N/A
-	24 Body Flange	68.6875	N/A
24 OD Shell Top	-	68	68.6875
24 OD Shell Bottom	-	0	68.6875
-	1/3 depth of Welded Cover	0	N/A
Welded Cover	-	-4.5	N/A

Note
For main components, the listed value of 'Le' is the largest unsupported length for the component.

Engineering Notes

1. Please see Nozzle "B" calculations at the end of this report.

24 OD Shell

ASME Section VIII Division 1, 2010 Edition

Component: Cylinder
Material specification: SA-240 316 (II-D p. 70, ln. 21)
Rated MDMT per UHA-51(d)(1)(a) = -320 °F

Internal design pressure: P = 450 psi @ 200 °F
External design pressure: P_e = 20.5 psi @ 200 °F

Static liquid head:

P_{th} = 0.85 psi (SG = 1, H_s = 23.625", Horizontal test head)

Corrosion allowance Inner C = 0" Outer C = 0"

Design MDMT = -20 °F
Rated MDMT = -320 °F

No impact test performed
Material is not normalized
Material is not produced to Fine Grain Practice
PWHT is not performed

Radiography: Longitudinal joint - Spot UW-11(b) Type 1
Top circumferential joint - N/A
Bottom circumferential joint - N/A

Estimated weight New = 538.4 lb corr = 538.4 lb
Capacity New = 124.98 US gal corr = 124.98 US gal

OD = 24"
Length = 68"
L_c
t = 0.375"

Design thickness, (at 200 °F) Appendix 1-1

$t = P*R_o / (S*E + 0.40*P) + \text{Corrosion}$
$= 450*12 / (20{,}000*0.85 + 0.40*450) + 0$
$= 0.3144"$

Maximum allowable working pressure, (at 200 °F) Appendix 1-1

$P = S*E*t / (R_o - 0.40*t) - P_s$
$= 20{,}000*0.85*0.375 / (12 - 0.40*0.375) - 0$
$= 537.97$ psi

Maximum allowable pressure, (at 68 °F) Appendix 1-1

$P = S*E*t / (R_o - 0.40*t)$
$= 20{,}000*0.85*0.375 / (12 - 0.40*0.375)$
$= 537.97$ psi

External Pressure, (Corroded & at 200 °F) UG-28(c)

$L / D_o = 68.6875 / 24 = 2.8620$
$D_o / t = 24 / 0.1379 = 174.0243$

From table G: A = 0.000199
From table HA-2: B = 2,675.6103 psi

P_a = 4*B / (3*(D_o / t))
= 4*2,675.61 / (3*(24 / 0.1379))
= 20.5 psi

Design thickness for external pressure P_a = 20.5 psi

t_a = t + Corrosion = 0.1379 + 0 = 0.1379"

Maximum Allowable External Pressure, (Corroded & at 200 °F) UG-28(c)

L / D_o = 68.6875 / 24 = 2.8620
D_o / t = 24 / 0.375 = 64.0000
From table G: A = 0.000868
From table HA-2: B = 9,031.2767 psi

P_a = 4*B / (3*(D_o / t))
= 4*9,031.28 / (3*(24 / 0.375))
= 188.15 psi

% Forming strain - UHA-44(a)(2)(a)

EFE = (50*t / R_f)*(1 - R_f / R_o)
= (50*0.375 / 11.8125)*(1 - 11.8125 / ∞)
= 1.5873%

External Pressure + Weight Check (Bergman, ASME paper 54-A-104)

P_v = W / (2*π*R_m) + M / (π*R_m^2)
= 1,323.2 / (2*π*11.8125) + 713 / (π*11.8125^2)
= 19.4543 lb/in

α = P_v / (P_e*D_o)
= 19.4543 / (20.5*24)
= 0.0395

n = 3

m = 1.23 / (L / D_o)^2
= 1.23 / $(68.6875 / 24)^2$
= 0.1502

Ratio P_e = (n^2 - 1 + m + m*α) / (n^2 - 1 + m)
= (3^2 - 1 + 0.1502 + 0.1502*0.0395) / (3^2 - 1 + 0.1502)
= 1.0007

Ratio P_e * P_e ≤ MAEP design cylinder thickness is satisfactory.

External Pressure + Weight Check at Bottom Seam (Bergman, ASME paper 54-A-104)

P_v = W / (2*π*R_m) + M / (π*R_m^2)
= -509.6 / (2*π*11.8125) + 0 / (π*11.8125^2)

$= -6.8661$ lb/in

$\alpha = P_v / (P_e * D_o)$
$= -6.8661 / (20.5*24)$
$= -0.0140$

$n = 3$

$m = 1.23 / (L / D_o)^2$
$= 1.23 / (68.6875 / 24)^2$
$= 0.1502$

Ratio $P_e = (n^2 - 1 + m + m*\alpha) / (n^2 - 1 + m)$
$= (3^2 - 1 + 0.1502 + 0.1502*-0.0140) / (3^2 - 1 + 0.1502)$
$= 1.0000$

Ratio $P_e * P_e \leq$ MAEP design cylinder thickness is satisfactory.

Design thickness = 0.3144"

The governing condition is due to internal pressure.

The cylinder thickness of 0.375" is adequate.

Thickness Required Due to Pressure + External Loads

Condition	Pressure P (psi)	Allowable Stress Before UG-23 Stress Increase (psi)		Temperature (°F)	Corrosion C (in)	Location	Load	Req'd Thk Due to Tension (in)	Req'd Thk Due to Compression (in)
		S_t	S_c						
Operating, Hot & Corroded	450	20,000	12,515	200	0	Top	Weight	0.1294	0.1292
						Bottom	Weight	0.1305	0.1305
Operating, Hot & New	450	20,000	12,515	200	0	Top	Weight	0.1294	0.1292
						Bottom	Weight	0.1305	0.1305
Hot Shut Down, Corroded	0	20,000	12,515	200	0	Top	Weight	0.0013	0.0016
						Bottom	Weight	0.0003	0.0003
Hot Shut Down, New	0	20,000	12,515	200	0	Top	Weight	0.0013	0.0016
						Bottom	Weight	0.0003	0.0003
Empty, Corroded	0	20,000	12,967	70	0	Top	Weight	0.0012	0.0015
						Bottom	Weight	0.0003	0.0003
Empty, New	0	20,000	12,967	70	0	Top	Weight	0.0012	0.0015
						Bottom	Weight	0.0003	0.0003
Vacuum	-20.5	20,000	12,515	200	0	Top	Weight	0.0108	0.0111
						Bottom	Weight	0.009	0.009
Hot Shut Down, Corroded, Weight & Eccentric Moments Only	0	20,000	12,515	200	0	Top	Weight	0.0013	0.0016
						Bottom	Weight	0.0003	0.0003

Allowable Compressive Stress, Hot and Corroded- S_{cHC}, (table HA-2)

A = $0.125 / (R_o / t)$
= 0.125 / (12 / 0.375)
= 0.003906

B = 12,515 psi

S = 20,000 / 1.00 = 20,000 psi

S_{cHC} = min(B, S) = 12,515 psi

Allowable Compressive Stress, Hot and New- S_{cHN}

S_{cHN} = S_{cHC}
= 12,515 psi

Allowable Compressive Stress, Cold and New- S_{cCN}, (table HA-2)

A = $0.125 / (R_o / t)$
= 0.125 / (12 / 0.375)
= 0.003906

B = 12,967 psi

S = 20,000 / 1.00 = 20,000 psi

S_{cCN} = min(B, S) = 12,967 psi

Allowable Compressive Stress, Cold and Corroded- S_{cCC}

S_{cCC} = S_{cCN}
= 12,967 psi

Allowable Compressive Stress, Vacuum and Corroded- S_{cVC}, (table HA-2)

A = $0.125 / (R_o / t)$
= 0.125 / (12 / 0.375)
= 0.003906

B = 12,515 psi

S = 20,000 / 1.00 = 20,000 psi

S_{cVC} = min(B, S) = 12,515 psi

Operating, Hot & Corroded, Above Support Point

t_p = $P*R / (2*S_t*K_s*E_c + 0.40*|P|)$ (Pressure)
= 450*11.625 / (2*20,000*1.00*1.00 + 0.40*|450|)
= 0.1302"

t_m = $M / (\pi*R_m^2*S_t*K_s*E_c)$ (bending)
= $713 / (\pi*11.8125^2*20,000*1.00*1.00)$
= 0.0001"

t_w = $W / (2*\pi*R_m*S_t*K_s*E_c)$ (Weight)
= 1,323.2 / (2*π*11.8125*20,000*1.00*1.00)
= 0.0009"

t_t = $t_p + t_m - t_w$ (total required, tensile)
= 0.1302 + 0.0001 - (0.0009)
= 0.1294"

t_c = $|t_{mc} + t_{wc} - t_{pc}|$ (total, net tensile)
= |0.0001 + (0.0009) - (0.1302)|
= 0.1292"

Maximum allowable working pressure, Longitudinal Stress

$P = 2*S_t*K_s*E_c*(t - t_m + t_w) / (R - 0.40*(t - t_m + t_w))$
= 2*20,000*1.00*1.00*(0.375 - 0.0001 + (0.0009)) / (11.625 - 0.40*(0.375 - 0.0001 + (0.0009)))
= 1,310.05 psi

Operating, Hot & New, Above Support Point

t_p = $P*R / (2*S_t*K_s*E_c + 0.40*|P|)$ (Pressure)
= 450*11.625 / (2*20,000*1.00*1.00 + 0.40*|450|)
= 0.1302"

t_m = $M / (\pi*R_m^2*S_t*K_s*E_c)$ (bending)
= $713 / (\pi*11.8125^2*20,000*1.00*1.00)$
= 0.0001"

t_w = $W / (2*\pi*R_m*S_t*K_s*E_c)$ (Weight)

$= 1,323.2 / (2*\pi*11.8125*20,000*1.00*1.00)$
$= 0.0009"$

$t_t = t_p + t_m - t_w$ (total required, tensile)
$= 0.1302 + 0.0001 - (0.0009)$
$= 0.1294"$

$t_c = |t_{mc} + t_{wc} - t_{pc}|$ (total, net tensile)
$= |0.0001 + (0.0009) - (0.1302)|$
$= 0.1292"$

Maximum allowable working pressure, Longitudinal Stress

$P = 2*S_t*K_s*E_c*(t - t_m + t_w) / (R - 0.40*(t - t_m + t_w))$
$= 2*20,000*1.00*1.00*(0.375 - 0.0001 + (0.0009)) / (11.625 - 0.40*(0.375 - 0.0001 + (0.0009)))$
$= 1,310.05$ psi

Hot Shut Down, Corroded, Above Support Point

$t_p = 0"$ (Pressure)
$t_m = M / (\pi*R_m^2*S_c*K_s)$ (bending)
$= 713 / (\pi*11.8125^2*12,514.79*1.00)$
$= 0.0001"$

$t_w = W / (2*\pi*R_m*S_c*K_s)$ (Weight)
$= 1,323.2 / (2*\pi*11.8125*12,514.79*1.00)$
$= 0.0014"$

$t_t = |t_p + t_m - t_w|$ (total, net compressive)
$= |0 + 0.0001 - (0.0014)|$
$= 0.0013"$

$t_c = t_{mc} + t_{wc} - t_{pc}$ (total required, compressive)
$= 0.0001 + (0.0014) - (0)$
$= 0.0016"$

Hot Shut Down, New, Above Support Point

$t_p = 0"$ (Pressure)
$t_m = M / (\pi*R_m^2*S_c*K_s)$ (bending)
$= 713 / (\pi*11.8125^2*12,514.79*1.00)$
$= 0.0001"$

$t_w = W / (2*\pi*R_m*S_c*K_s)$ (Weight)
$= 1,323.2 / (2*\pi*11.8125*12,514.79*1.00)$
$= 0.0014"$

$t_t = |t_p + t_m - t_w|$ (total, net compressive)
$= |0 + 0.0001 - (0.0014)|$
$= 0.0013"$

$t_c = t_{mc} + t_{wc} - t_{pc}$ (total required, compressive)
$= 0.0001 + (0.0014) - (0)$
$= 0.0016"$

Empty, Corroded, Above Support Point

t_p = 0" (Pressure)

t_m = $M / (\pi*R_m^2*S_c*K_s)$ (bending)
= $713 / (\pi*11.8125^2*12{,}966.55*1.00)$
= 0.0001"

t_w = $W / (2*\pi*R_m*S_c*K_s)$ (Weight)
= $1{,}323.2 / (2*\pi*11.8125*12{,}966.55*1.00)$
= 0.0014"

t_t = $|t_p + t_m - t_w|$ (total, net compressive)
= |0 + 0.0001 - (0.0014)|
= 0.0012"

t_c = $t_{mc} + t_{wc} - t_{pc}$ (total required, compressive)
= 0.0001 + (0.0014) - (0)
= 0.0015"

Empty, New, Above Support Point

t_p = 0" (Pressure)

t_m = $M / (\pi*R_m^2*S_c*K_s)$ (bending)
= $713 / (\pi*11.8125^2*12{,}966.55*1.00)$
= 0.0001"

t_w = $W / (2*\pi*R_m*S_c*K_s)$ (Weight)
= $1{,}323.2 / (2*\pi*11.8125*12{,}966.55*1.00)$
= 0.0014"

t_t = $|t_p + t_m - t_w|$ (total, net compressive)
= |0 + 0.0001 - (0.0014)|
= 0.0012"

t_c = $t_{mc} + t_{wc} - t_{pc}$ (total required, compressive)
= 0.0001 + (0.0014) - (0)
= 0.0015"

Vacuum, Above Support Point

t_p = $P*R / (2*S_c*K_s + 0.40*|P|)$ (Pressure)
= $-20.5*11.625 / (2*12{,}514.79*1.00 + 0.40*|20.5|)$
= -0.0095"

t_m = $M / (\pi*R_m^2*S_c*K_s)$ (bending)
= $713 / (\pi*11.8125^2*12{,}514.79*1.00)$
= 0.0001"

t_w = $W / (2*\pi*R_m*S_c*K_s)$ (Weight)
= $1{,}323.2 / (2*\pi*11.8125*12{,}514.79*1.00)$
= 0.0014"

t_t = $|t_p + t_m - t_w|$ (total, net compressive)
= |-0.0095 + 0.0001 - (0.0014)|
= 0.0108"

t_c = $t_{mc} + t_{wc} - t_{pc}$ (total required, compressive)

$= 0.0001 + (0.0014) - (-0.0095)$
$= 0.0111"$

Maximum Allowable External Pressure, Longitudinal Stress

$P = 2*S_c*K_s*(t - t_{mc} - t_{wc}) / (R - 0.40*(t - t_{mc} - t_{wc}))$
$= 2*12{,}514.79*1.00*(0.375 - 0.0001 - 0.0014) / (11.625 - 0.40*(0.375 - 0.0001 - 0.0014))$
$= 814.53$ psi

Hot Shut Down, Corroded, Weight & Eccentric Moments Only, Above Support Point

$t_p = 0"$ (Pressure)
$t_m = M / (\pi*R_m^2*S_c*K_s)$ (bending)
$= 713 / (\pi*11.8125^2*12{,}514.79*1.00)$
$= 0.0001"$

$t_w = W / (2*\pi*R_m*S_c*K_s)$ (Weight)
$= 1{,}323.2 / (2*\pi*11.8125*12{,}514.79*1.00)$
$= 0.0014"$

$t_t = |t_p + t_m - t_w|$ (total, net compressive)
$= |0 + 0.0001 - (0.0014)|$
$= 0.0013"$

$t_c = t_{mc} + t_{wc} - t_{pc}$ (total required, compressive)
$= 0.0001 + (0.0014) - (0)$
$= 0.0016"$

Operating, Hot & Corroded, Below Support Point

$t_p = P*R / (2*S_t*K_s*E_c + 0.40*|P|)$ (Pressure)
$= 450*11.625 / (2*20{,}000*1.00*1.00 + 0.40*|450|)$
$= 0.1302"$

$t_m = M / (\pi*R_m^2*S_t*K_s*E_c)$ (bending)
$= 0 / (\pi*11.8125^2*20{,}000*1.00*1.00)$
$= 0"$

$t_w = W / (2*\pi*R_m*S_t*K_s*E_c)$ (Weight)
$= -509.6 / (2*\pi*11.8125*20{,}000*1.00*1.00)$
$= -0.0003"$

$t_t = t_p + t_m - t_w$ (total required, tensile)
$= 0.1302 + 0 - (-0.0003)$
$= 0.1305"$

$t_c = |t_{mc} + t_{wc} - t_{pc}|$ (total, net tensile)
$= |0 + (-0.0003) - (0.1302)|$
$= 0.1305"$

Maximum allowable working pressure, Longitudinal Stress

$P = 2*S_t*K_s*E_c*(t - t_m + t_w) / (R - 0.40*(t - t_m + t_w))$

= 2*20,000*1.00*1.00*(0.375 - 0 + (-0.0003)) / (11.625 - 0.40*(0.375 - 0 + (-0.0003)))
= 1,305.98 psi

Operating, Hot & New, Below Support Point

t_p	=	$P*R / (2*S_t*K_s*E_c + 0.40*\|P\|)$	(Pressure)
	=	450*11.625 / (2*20,000*1.00*1.00 + 0.40*|450|)	
	=	0.1302"	
t_m	=	$M / (\pi*R_m^2*S_t*K_s*E_c)$	(bending)
	=	$0 / (\pi*11.8125^2*20,000*1.00*1.00)$	
	=	0"	
t_w	=	$W / (2*\pi*R_m*S_t*K_s*E_c)$	(Weight)
	=	-509.6 / (2*π*11.8125*20,000*1.00*1.00)	
	=	-0.0003"	
t_t	=	$t_p + t_m - t_w$	(total required, tensile)
	=	0.1302 + 0 - (-0.0003)	
	=	0.1305"	
t_c	=	$\|t_{mc} + t_{wc} - t_{pc}\|$	(total, net tensile)
	=	|0 + (-0.0003) - (0.1302)|	
	=	0.1305"	

Maximum allowable working pressure, Longitudinal Stress

$P = 2*S_t*K_s*E_c*(t - t_m + t_w) / (R - 0.40*(t - t_m + t_w))$
= 2*20,000*1.00*1.00*(0.375 - 0 + (-0.0003)) / (11.625 - 0.40*(0.375 - 0 + (-0.0003)))
= 1,305.98 psi

Hot Shut Down, Corroded, Below Support Point

t_p	=	0"	(Pressure)
t_m	=	$M / (\pi*R_m^2*S_t*K_s*E_c)$	(bending)
	=	$0 / (\pi*11.8125^2*20,000*1.00*1.00)$	
	=	0"	
t_w	=	$W / (2*\pi*R_m*S_t*K_s*E_c)$	(Weight)
	=	-509.6 / (2*π*11.8125*20,000*1.00*1.00)	
	=	-0.0003"	
t_t	=	$t_p + t_m - t_w$	(total required, tensile)
	=	0 + 0 - (-0.0003)	
	=	0.0003"	
t_c	=	$\|t_{mc} + t_{wc} - t_{pc}\|$	(total, net tensile)
	=	|0 + (-0.0003) - (0)|	
	=	0.0003"	

Hot Shut Down, New, Below Support Point

t_p	=	0"	(Pressure)
t_m	=	$M / (\pi*R_m^2*S_t*K_s*E_c)$	(bending)
	=	$0 / (\pi*11.8125^2*20{,}000*1.00*1.00)$	
	=	0"	
t_w	=	$W / (2*\pi*R_m*S_t*K_s*E_c)$	(Weight)
	=	$-509.6 / (2*\pi*11.8125*20{,}000*1.00*1.00)$	
	=	-0.0003"	
t_t	=	$t_p + t_m - t_w$	(total required, tensile)
	=	0 + 0 - (-0.0003)	
	=	0.0003"	
t_c	=	$\lvert t_{mc} + t_{wc} - t_{pc} \rvert$	(total, net tensile)
	=	$\lvert 0 + (-0.0003) - (0) \rvert$	
	=	0.0003"	

Empty, Corroded, Below Support Point

t_p	=	0"	(Pressure)
t_m	=	$M / (\pi*R_m^2*S_t*K_s*E_c)$	(bending)
	=	$0 / (\pi*11.8125^2*20{,}000*1.00*1.00)$	
	=	0"	
t_w	=	$W / (2*\pi*R_m*S_t*K_s*E_c)$	(Weight)
	=	$-509.6 / (2*\pi*11.8125*20{,}000*1.00*1.00)$	
	=	-0.0003"	
t_t	=	$t_p + t_m - t_w$	(total required, tensile)
	=	0 + 0 - (-0.0003)	
	=	0.0003"	
t_c	=	$\lvert t_{mc} + t_{wc} - t_{pc} \rvert$	(total, net tensile)
	=	$\lvert 0 + (-0.0003) - (0) \rvert$	
	=	0.0003"	

Empty, New, Below Support Point

t_p	=	0"	(Pressure)
t_m	=	$M / (\pi*R_m^2*S_t*K_s*E_c)$	(bending)
	=	$0 / (\pi*11.8125^2*20{,}000*1.00*1.00)$	
	=	0"	
t_w	=	$W / (2*\pi*R_m*S_t*K_s*E_c)$	(Weight)
	=	$-509.6 / (2*\pi*11.8125*20{,}000*1.00*1.00)$	
	=	-0.0003"	
t_t	=	$t_p + t_m - t_w$	(total required, tensile)
	=	0 + 0 - (-0.0003)	

$= 0.0003"$

$t_c = |t_{mc} + t_{wc} - t_{pc}|$ (total, net tensile)

$= |0 + (-0.0003) - (0)|$

$= 0.0003"$

Vacuum, Below Support Point

$t_p = P*R / (2*S_c*K_s + 0.40*|P|)$ (Pressure)

$= -20.5*11.625 / (2*12,514.79*1.00 + 0.40*|20.5|)$

$= -0.0095"$

$t_m = M / (\pi*R_m^2*S_c*K_s)$ (bending)

$= 0 / (\pi*11.8125^2*12,514.79*1.00)$

$= 0"$

$t_w = W / (2*\pi*R_m*S_c*K_s)$ (Weight)

$= -509.6 / (2*\pi*11.8125*12,514.79*1.00)$

$= -0.0005"$

$t_t = |t_p + t_m - t_w|$ (total, net compressive)

$= |-0.0095 + 0 - (-0.0005)|$

$= 0.009"$

$t_c = t_{mc} + t_{wc} - t_{pc}$ (total required, compressive)

$= 0 + (-0.0005) - (-0.0095)$

$= 0.009"$

Maximum Allowable External Pressure, Longitudinal Stress

$P = 2*S_c*K_s*(t - t_{mc} - t_{wc}) / (R - 0.40*(t - t_{mc} - t_{wc}))$

$= 2*12,514.79*1.00*(0.375 - 0 - -0.0005) / (11.625 - 0.40*(0.375 - 0 - -0.0005))$

$= 819.17$ psi

Hot Shut Down, Corroded, Weight & Eccentric Moments Only, Below Support Point

$t_p = 0"$ (Pressure)

$t_m = M / (\pi*R_m^2*S_t*K_s*E_c)$ (bending)

$= 0 / (\pi*11.8125^2*20,000*1.00*1.00)$

$= 0"$

$t_w = W / (2*\pi*R_m*S_t*K_s*E_c)$ (Weight)

$= -509.6 / (2*\pi*11.8125*20,000*1.00*1.00)$

$= -0.0003"$

$t_t = t_p + t_m - t_w$ (total required, tensile)

$= 0 + 0 - (-0.0003)$

$= 0.0003"$

$t_c = |t_{mc} + t_{wc} - t_{pc}|$ (total, net tensile)

$= |0 + (-0.0003) - (0)|$

$= 0.0003"$

ASME VIII-1, 2010 Edition, Appendix 2 Flange Calculations

Flange is attached to:	24 OD Shell (Top)	
Flange type:	Ring type loose	
Flange material specification:	SA-240 316L (II-D p. 66, ln. 27)	
Bolt material specification:	SA-193 B7 Bolt <= 2 1/2 (II-D p. 334, ln. 32)	
Bolt Description:	1.5 in Series 8 Thread	
Internal design pressure, P:	450 psi @ 200 °F	
Required flange thickness: t_r=	4.4865 in	
Maximum allowable working pressure, MAWP:	460.41 psi @ 200 °F	
Maximum allowable pressure, MAP:	460.41 psi @ 68 °F	
External design pressure, P_e	20.5 psi @ 200 °F	
Maximum allowable external pressure, MAEP:	760.7 psi @ 200 °F	
Corrosion allowance:	Bore = 0 in	Flange = 0 in
Bolt corrosion (root), C_{bolt}:	0 in	
Design MDMT:	-20 °F	No impact test performed
Rated MDMT:	-55 °F	Flange material is not normalized Material is not produced to fine grain practice PWHT is not performed
Estimated weight:	New = 740.3 lb	corroded = 740.3 lb

Flange dimensions, new

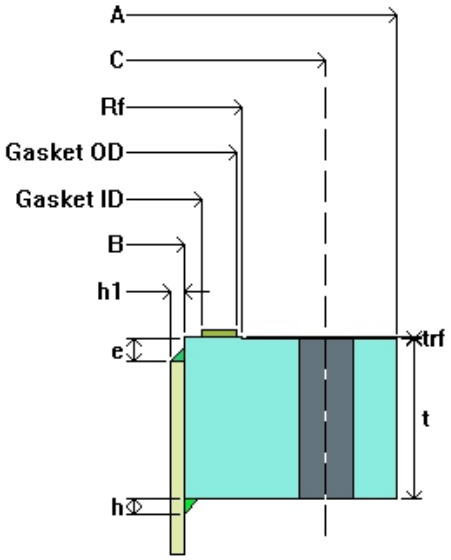

flange OD	A	= 36 in
bolt circle	C	= 32 in
raised face OD	Rf	= 27.25 in
gasket OD		= 27 in
gasket ID		= 25 in
flange ID	B	= 24 in
facing height	t_{rf}	= 0.0625 in
thickness	t	= 4.5 in
bolting		= 24- 1.5 in dia
lower fillet weld	h	= 0.4375 in
upper fillet weld	h1	= 0.375 in
length	e	= 0.625 in
gasket factor	m	= 2
seating stress	y	= 2,500 psi

Gasket thickness T = 0.175 in

Note: this flange is calculated as a loose type.

Flange calculations for Internal Pressure + Weight Only

Gasket details from facing sketch 1(a) or (b), Column II

Gasket width N = 1 in

b_0 = N/2 = 0.5 in

Effective gasket seating width, b = $0.5*b_0^{1/2}$ = 0.3536 in

G = OD of contact face - 2*b = 27 - 2*0.3536 = 26.2928 in

h_G = (C - G)/2 = (32 - 26.2928)/2 = 2.8536 in

h_D = (C - B)/2 = (32 - 24)/2 = 4 in

h_T = (h_D + h_G)/2 = (4 + 2.8536)/2 = 3.4268 in

H_p = 2*b*3.14*G*m*P
= 2*0.3536*3.14*26.2928*2*450
= 52,547.4 lb_f

H = $0.785*G^2*P$
= $0.785*26.2928^2*450$
= 244,205.73 lb_f

H_D = $0.785*B^2*P$
= $0.785*24^2*450$
= 203,472 lb_f

H_T = H - H_D
= 244,205.73 - 203,472
= 40,733.73 lb_f

W_{m1} = H + H_p
= 244,205.73 + 52,547.4
= 296,753.13 lb_f

W_{m2} = 3.14*b*G*y
= 3.14*0.3536*26.2928*2,500
= 72,982.5 lb_f

Required bolt area, A_m = greater of A_{m1}, A_{m2} = 11.8701 in^2

A_{m1} = W_{m1}/S_b = 296,753.13/25,000 = 11.8701 in^2

A_{m2} = W_{m2}/S_a = 72,982.5/25,000 = 2.9193 in^2

Total area for 24- 1.5 in dia bolts, corroded, A_b = 33.72 in^2

$W = (A_m + A_b)*S_a/2$
$= (11.8701 + 33.72)*25,000/2$
$= 569,876.56\ lb_f$

$M_D = H_D*h_D = 203,472*4 = 813,888\ lb_f\text{-in}$
$M_T = H_T*h_T = 40,733.73*3.4268 = 139,586.3\ lb_f\text{-in}$

$H_G = W_{m1} - H = 296,753.13 - 244,205.73 = 52,547.4\ lb_f$

$M_G = H_G*h_G = 52,547.4*2.8536 = 149,949.3\ lb_f\text{-in}$

$M_o = M_D + M_T + M_G = 813,888 + 139,586.3 + 149,949.3 = 1,103,423.6\ lb_f\text{-in}$

$M_g = W*h_G = 569,876.56*2.8536 = 1,626,199.7\ lb_f\text{-in}$

From FIG. 2-7.1, where K = A/B = 36/24 = 1.5, Y = 4.961

Stresses at operating conditions - VIII-1, Appendix 2-7

$S_R = S_H = 0$

$S_T = Y*M_o/(t^2*B)$
$= 4.961*1,103,423.6/(4.5^2*24)$
$= 11,264$ psi

Allowable stress $S_{fo} = 16,700$ psi

S_T does not exceed S_{fo}

Stresses at gasket seating - VIII-1, Appendix 2-7

$S_T = Y*M_g/(t^2*B)$
$= 4.961*1,626,199.7/(4.5^2*24)$
$= 16,600$ psi

Allowable stress $S_{fa} = 16,700$ psi

S_T does not exceed S_{fa}

Flange rigidity per VIII-1, Appendix 2-14

$J = 109.4*M_o/(E*t^3*K_L*\ln(K))$
$= 109.4*1,626,199.7/(28.3E+06*4.5^3*0.2*\ln(1.5))$
$= 0.8507$

The flange rigidity index J does not exceed 1; satisfactory.

Flange calculations for External Pressure + Weight Only per VIII-1, Appendix 2-11

Gasket details from facing sketch 1(a) or (b), Column II

Gasket width N = 1 in

$b_0 = N/2 = 0.5$ in

Effective gasket seating width, $b = 0.5*b_0^{1/2} = 0.3536$ in

G = OD of contact face - 2*b = 27 - 2*0.3536 = 26.2928 in

h_G = (C - G)/2 = (32 - 26.2928)/2 = 2.8536 in

h_D = (C - B)/2 = (32 - 24)/2 = 4 in

$h_T = (h_D + h_G)/2$ = (4 + 2.8536)/2 = 3.4268 in

H_p = 2*b*3.14*G*m*P
= 2*0.3536*3.14*26.2928*2*20.5
= 2,393.83 lb_f

H = 0.785*G^2*P
= 0.785*26.2928^2*20.5
= 11,124.93 lb_f

H_D = 0.785*B^2*P
= 0.785*24^2*20.5
= 9,269.28 lb_f

$H_T = H - H_D$
= 11,124.93 - 9,269.28
= 1,855.65 lb_f

$W_{m1} = H + H_p$
= 11,124.93 + 2,393.83
= 13,518.75 lb_f

W_{m2} = 3.14*b*G*y
= 3.14*0.3536*26.2928*2,500
= 72,982.5 lb_f

Required bolt area, A_m = greater of A_{m1}, A_{m2} = 2.9193 in^2

$A_{m1} = 0.785*G^2*(P_m - P_r)/S_b$ = 0/25,000 = 0 in^2

$A_{m2} = W_{m2}/S_a$ = 72,982.5/25,000 = 2.9193 in^2

Total area for 24- 1.5 in dia bolts, corroded, A_b = 33.72 in^2

$W = (A_{m2} + A_b)*S_a/2$
= (2.9193 + 33.72)*25,000/2
= 457,991.24 lb_f

$M_o = H_D*(h_D - h_G) + H_T*(h_T - h_G)$
= 9,269.28*(4 - 2.8536) + 1,855.65*(3.4268 - 2.8536)
= 11,690 lb_f-in

$M_g = W*h_G$ = 457,991.24*2.8536 = 1,306,923.8 lb_f-in

From FIG. 2-7.1, where K = A/B = 36/24 = 1.5, Y = 4.961

Stresses at operating conditions - VIII-1, Appendix 2-7

$S_R = S_H = 0$

$S_T = Y*M_o/(t^2*B)$

$= 4.961*11,690/(4.5^2*24)$
$= 119$ psi

Allowable stress $S_{fo} = 16,700$ psi

S_T does not exceed S_{fo}

Stresses at gasket seating - VIII-1, Appendix 2-7

$S_T = Y*M_g/(t^2*B)$
$= 4.961*1,306,923.8/(4.5^2*24)$
$= 13,341$ psi

Allowable stress $S_{fa} = 16,700$ psi

S_T does not exceed S_{fa}

Flange rigidity per VIII-1, Appendix 2-14

$J = 109.4*M_o/(E*t^3*K_L*\ln(K))$
$= 109.4*1,306,923.8/(28.3E+06*4.5^3*0.2*\ln(1.5))$
$= 0.6837$

The flange rigidity index J does not exceed 1; satisfactory.

Nozzle A (A)

ASME Section VIII Division 1, 2010 Edition

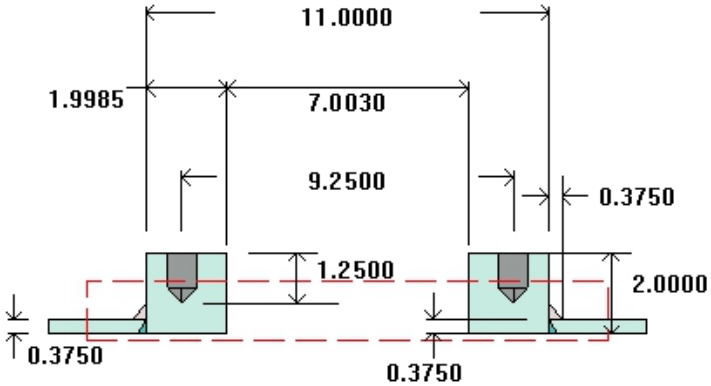

Pad inner diameter =	7.003 in
Pad thickness =	2 in
Tapped hole diameter =	0.75 in
Tapped hole depth =	1.25 in
Tapped hole bolt circle =	9.25 in
Raised face height =	0 in
Raised face outer diameter =	8.5 in
Inner fillet =	0.375 in
$t_{w(lower)}$ =	0.375 in
D_p =	11 in
t_e =	1.625 in

.

Note: round inside edges per UG-76(c)

Note: Thread engagement shall comply with the requirements of UG-43(g).

Located on:	24 OD Shell
Liquid static head included:	0 psi
Nozzle material specification:	SA-240 316L (II-D p. 66, ln. 27)
Bolt material specification:	SA-193 B7 Bolt <= 2 1/2 (II-D p. 334, ln. 32)
Nozzle longitudinal joint efficiency:	1
Nozzle orientation:	90°
Local vessel minimum thickness:	0.375 in
Nozzle center line offset to datum line:	19.5 in
End of nozzle to shell center:	13.5625 in
Nozzle corrosion allowance:	0 in
Projection available outside vessel, Lpr:	1.5625 in

Reinforcement Calculations for Internal Pressure

Available reinforcement per UG-37 governs the MAWP of this nozzle.

UG-37 Area Calculation Summary (in^2) For P = 575.52 psi @ 200 °F The opening is adequately reinforced							UG-45 Nozzle Wall Thickness Summary (in) The nozzle passes UG-45	
A required	A available	A_1	A_2	A_3	A_5	A welds	t_{req}	t_{min}
3.4596	3.4596	0.2133	--	--	3.1289	0.1174	0.3281	1.9985

UG-41 Weld Failure Path Analysis Summary
The nozzle is exempt from weld strength calculations per UW-15(b)(1)

UW-16 Weld Sizing Summary			
Weld description	Required weld throat size (in)	Actual weld throat size (in)	Status
Pad to shell fillet (Leg_{42})	0.25	0.2625	weld size is adequate

Calculations for internal pressure 575.52 psi @ 200 °F

Pad rated MDMT per UHA-51(d)(1)(a) = -320 °F.

Parallel Limit of reinforcement per UG-40

L_R = MAX(d, R_n + (t_n - C_n) + (t - C))
= MAX(7.003, 3.5015 + (0) + (0.375 - 0))
= 7.003 in

Outer Normal Limit of reinforcement per UG-40

L_H = MIN(2.5*(t - C), 2.5*(t_n - C_n) + t_e)
= MIN(2.5*(0.375 - 0), 2.5*(0) + 1.625)
= 0.9375 in

Required thickness t_r from UG-37(a)

t_r = P*R_o / (S*E + 0.4*P)
= 575.5208*12 / (20,000*1 + 0.4*575.5208)
= 0.3414 in

Area required per UG-37(c)

Allowable stresses: S_n = 16,700, S_v = 20,000, S_p = 16,700 psi

f_{r1} = lesser of 1 or S_n / S_v = 0.835

f_{r2} = lesser of 1 or S_n / S_v = 0.835

f_{r4} = lesser of 1 or S_p / S_v = 0.835

A = $d*t_r*F + 2*t_n*t_r*F*(1 - f_{r1})$ + Tapped hole area loss
= 7.003*0.3414*1 + 2*1.9985*0.3414*1*(1 - 0.835) + 0.8438
= 3.4596 in^2

Area available from FIG. UG-37.1

A_1 = larger of the following= 0.2133 in^2

= $d*(E_1*t - F*t_r) - 2*t_n*(E_1*t - F*t_r)*(1 - f_{r1})$
= 7.003*(1*0.375 - 1*0.3414) - 2*1.9985*(1*0.375 - 1*0.3414)*(1 - 0.835)
= 0.2133 in^2

= $2*(t + t_n)*(E_1*t - F*t_r) - 2*t_n*(E_1*t - F*t_r)*(1 - f_{r1})$
= 2*(0.375 + 1.9985)*(1*0.375 - 1*0.3414) - 2*1.9985*(1*0.375 - 1*0.3414)*(1 - 0.835)
= 0.1374 in^2

Area A_2 is not included in these calculations.
A_{42} = Leg^2*f_{r4}
= $0.375^2*0.835$
= 0.1174 in^2

A_5 = $(D_p$ - Pad ID$)*t_e*f_{r4}$
= (11 - 7.003)*0.9375*0.835
= 3.1289 in^2

Area = $A_1 + A_{42} + A_5$
= 0.2133 + 0.1174 + 3.1289
= 3.4596 in^2

As Area >= A the reinforcement is adequate.

UW-16(c) Weld Check

Fillet weld: t_{min} = lesser of 0.75 or t_e or t = 0.375 in
$t_{c(min)}$ = lesser of 0.25 or $0.7*t_{min}$ = 0.25 in
$t_{c(actual)}$ = 0.7*Leg = 0.7*0.375 = 0.2625 in

The fillet weld size is satisfactory.

Weld strength calculations are not required for this detail which conforms to Fig. UW-16.1, sketch (c-e).

UG-45 Nozzle Neck Thickness Check

$t_{a\ UG\text{-}27}$ = P*R / (S*E - 0.6*P) + Corrosion

$= 575.5208*3.5015 / (16,700*1 - 0.6*575.5208) + 0$
$= 0.1232$ in

$t_a = \max[\ t_{a\ UG\text{-}27}\ ,\ t_{a\ UG\text{-}22}\ ]$
$= \max[\ 0.1232\ ,\ 0\ ]$
$= 0.1232$ in

$t_{b1} = P*R_o / (S*E + 0.4*P) + \text{Corrosion}$
$= 575.5208*12 / (20,000*1 + 0.4*575.5208) + 0$
$= 0.3414$ in

$t_{b1} = \max[\ t_{b1}\ ,\ t_{b\ UG16}\ ]$
$= \max[\ 0.3414\ ,\ 0.0625\ ]$
$= 0.3414$ in

$t_b = \min[\ t_{b3}\ ,\ t_{b1}\ ]$
$= \min[\ 0.3281\ ,\ 0.3414\ ]$
$= 0.3281$ in

$t_{UG\text{-}45} = \max[\ t_a\ ,\ t_b\ ]$
$= \max[\ 0.1232\ ,\ 0.3281\ ]$
$= 0.3281$ in

Available nozzle wall thickness new, t_n = 1.9985 in

The nozzle neck thickness is adequate.

Reinforcement Calculations for MAP

Available reinforcement per UG-37 governs the MAP of this nozzle.

UG-37 Area Calculation Summary (in^2) For P = 575.52 psi @ 68 °F The opening is adequately reinforced							UG-45 Nozzle Wall Thickness Summary (in) The nozzle passes UG-45	
A required	A available	A_1	A_2	A_3	A_5	A welds	t_{req}	t_{min}
3.4596	3.4596	0.2133	--	--	3.1289	0.1174	0.3281	1.9985

UG-41 Weld Failure Path Analysis Summary
The nozzle is exempt from weld strength calculations per UW-15(b)(1)

UW-16 Weld Sizing Summary			
Weld description	Required weld throat size (in)	Actual weld throat size (in)	Status
Pad to shell fillet (Leg_{42})	0.25	0.2625	weld size is adequate

Calculations for internal pressure 575.52 psi @ 68 °F

Pad rated MDMT per UHA-51(d)(1)(a) = -320 °F.

Parallel Limit of reinforcement per UG-40

L_R = MAX(d, R_n + (t_n - C_n) + (t - C))
= MAX(7.003, 3.5015 + (0) + (0.375 - 0))
= 7.003 in

Outer Normal Limit of reinforcement per UG-40

L_H = MIN(2.5*(t - C), 2.5*(t_n - C_n) + t_e)
= MIN(2.5*(0.375 - 0), 2.5*(0) + 1.625)
= 0.9375 in

Required thickness t_r from UG-37(a)

t_r = P*R_o / (S*E + 0.4*P)
= 575.5208*12 / (20,000*1 + 0.4*575.5208)
= 0.3414 in

Area required per UG-37(c)

Allowable stresses: S_n = 16,700, S_v = 20,000, S_p = 16,700 psi

f_{r1} = lesser of 1 or S_n / S_v = 0.835

f_{r2} = lesser of 1 or S_n / S_v = 0.835

f_{r4} = lesser of 1 or S_p / S_v = 0.835

A = $d*t_r*F + 2*t_n*t_r*F*(1 - f_{r1})$ + Tapped hole area loss
= 7.003*0.3414*1 + 2*1.9985*0.3414*1*(1 - 0.835) + 0.8438
= 3.4596 in^2

Area available from FIG. UG-37.1

A_1 = larger of the following= 0.2133 in^2

= $d*(E_1*t - F*t_r) - 2*t_n*(E_1*t - F*t_r)*(1 - f_{r1})$
= 7.003*(1*0.375 - 1*0.3414) - 2*1.9985*(1*0.375 - 1*0.3414)*(1 - 0.835)
= 0.2133 in^2

= $2*(t + t_n)*(E_1*t - F*t_r) - 2*t_n*(E_1*t - F*t_r)*(1 - f_{r1})$
= 2*(0.375 + 1.9985)*(1*0.375 - 1*0.3414) - 2*1.9985*(1*0.375 - 1*0.3414)*(1 - 0.835)
= 0.1374 in^2

Area A_2 is not included in these calculations.

A_{42} = Leg^2*f_{r4}
= $0.375^2*0.835$
= 0.1174 in^2

A_5 = $(D_p$ - Pad ID$)*t_e*f_{r4}$
= (11 - 7.003)*0.9375*0.835
= 3.1289 in^2

Area = $A_1 + A_{42} + A_5$
= 0.2133 + 0.1174 + 3.1289
= 3.4596 in^2

As Area >= A the reinforcement is adequate.

UW-16(c) Weld Check

Fillet weld: t_{min} = lesser of 0.75 or t_e or t = 0.375 in
$t_{c(min)}$ = lesser of 0.25 or $0.7*t_{min}$ = 0.25 in
$t_{c(actual)}$ = 0.7*Leg = 0.7*0.375 = 0.2625 in

The fillet weld size is satisfactory.

Weld strength calculations are not required for this detail which conforms to Fig. UW-16.1, sketch (c-e).

UG-45 Nozzle Neck Thickness Check

$t_{a\ UG\text{-}27}$ = P*R / (S*E - 0.6*P) + Corrosion
= 575.5208*3.5015 / (16,700*1 - 0.6*575.5208) + 0
= 0.1232 in

t_a = max[$t_{a\ UG\text{-}27}$, $t_{a\ UG\text{-}22}$]
= max[0.1232 , 0]
= 0.1232 in

t_{b1} = P*R_o / (S*E + 0.4*P) + Corrosion
= 575.5208*12 / (20,000*1 + 0.4*575.5208) + 0
= 0.3414 in

t_{b1} = max[t_{b1} , $t_{b\ UG16}$]
= max[0.3414 , 0.0625]
= 0.3414 in

t_b = min[t_{b3} , t_{b1}]
= min[0.3281 , 0.3414]
= 0.3281 in

$t_{UG\text{-}45}$ = max[t_a , t_b]
= max[0.1232 , 0.3281]
= 0.3281 in

Available nozzle wall thickness new, t_n = 1.9985 in

The nozzle neck thickness is adequate.

Reinforcement Calculations for External Pressure

UG-37 Area Calculation Summary (in^2) For Pe = 188.15 psi @ 200 °F The opening is adequately reinforced							UG-45 Nozzle Wall Thickness Summary (in) The nozzle passes UG-45	
A required	A available	A_1	A_2	A_3	A_5	A welds	t_{req}	t_{min}
2.2805	3.2463	--	--	--	3.1289	0.1174	0.1295	1.9985

UG-41 Weld Failure Path Analysis Summary
Weld strength calculations are not required for external pressure

UW-16 Weld Sizing Summary			
Weld description	Required weld throat size (in)	Actual weld throat size (in)	Status
Pad to shell fillet (Leg_{42})	0.25	0.2625	weld size is adequate

Calculations for external pressure 188.15 psi @ 200 °F

Parallel Limit of reinforcement per UG-40

L_R = MAX(d, R_n + (t_n - C_n) + (t - C))
= MAX(7.003, 3.5015 + (0) + (0.375 - 0))
= 7.003 in

Outer Normal Limit of reinforcement per UG-40

L_H = MIN(2.5*(t - C), 2.5*(t_n - C_n) + t_e)
= MIN(2.5*(0.375 - 0), 2.5*(0) + 1.625)
= 0.9375 in

From UG-37(d)(1) required thickness t_r = 0.375 in

Area required per UG-37(d)(1)

Allowable stresses: S_n = 16,700, S_v = 20,000, S_p = 16,700 psi

f_{r1} = lesser of 1 or S_n / S_v = 0.835

f_{r2} = lesser of 1 or S_n / S_v = 0.835

f_{r4} = lesser of 1 or S_p / S_v = 0.835

$A = 0.5*(d*t_r*F + 2*t_n*t_r*F*(1 - f_{r1})) + \text{Tapped hole area loss}$
$= 0.5*(7.003*0.375*1 + 2*1.9985*0.375*1*(1 - 0.835)) + 0.8438$
$= \underline{2.2805}\ in^2$

Area available from FIG. UG-37.1

A_1 = larger of the following= $\underline{0}\ in^2$

$= d*(E_1*t - F*t_r) - 2*t_n*(E_1*t - F*t_r)*(1 - f_{r1})$
$= 7.003*(1*0.375 - 1*0.375) - 2*1.9985*(1*0.375 - 1*0.375)*(1 - 0.835)$
$= 0\ in^2$

$= 2*(t + t_n)*(E_1*t - F*t_r) - 2*t_n*(E_1*t - F*t_r)*(1 - f_{r1})$
$= 2*(0.375 + 1.9985)*(1*0.375 - 1*0.375) - 2*1.9985*(1*0.375 - 1*0.375)*(1 - 0.835)$
$= 0\ in^2$

Area A_2 is not included in these calculations.
$A_{42} = Leg^2*f_{r4}$
$= 0.375^2*0.835$
$= \underline{0.1174}\ in^2$

$A_5 = (D_p - \text{Pad ID})*t_e*f_{r4}$
$= (11 - 7.003)*0.9375*0.835$
$= \underline{3.1289}\ in^2$

$\text{Area} = A_1 + A_{42} + A_5$
$= 0 + 0.1174 + 3.1289$
$= \underline{3.2463}\ in^2$

As Area >= A the reinforcement is adequate.

UW-16(c) Weld Check

Fillet weld: t_{min} = lesser of 0.75 or t_e or t = 0.375 in
$t_{c(min)}$ = lesser of 0.25 or $0.7*t_{min}$ = $\underline{0.25}$ in
$t_{c(actual)} = 0.7*Leg = 0.7*0.375 = 0.2625$ in

The fillet weld size is satisfactory.

Weld strength calculations are not required for this detail which conforms to Fig. UW-16.1, sketch (c-e).

UG-45 Nozzle Neck Thickness Check

$t_{a\ UG\text{-}28} = 0.1295$ in

$t_a = \max[\ t_{a\ UG\text{-}28}\ ,\ t_{a\ UG\text{-}22}\ ]$
$= \max[\ 0.1295\ ,\ 0\ ]$
$= 0.1295$ in

t_{b2} = $P*R_o$ / (S*E + 0.4*P) + Corrosion
= 188.1516*12 / (20,000*1 + 0.4*188.1516) + 0
= 0.1125 in

t_{b2} = max[t_{b2} , $t_{b\ UG16}$]
= max[0.1125 , 0.0625]
= 0.1125 in

t_b = min[t_{b3} , t_{b2}]
= min[0.3281 , 0.1125]
= 0.1125 in

t_{UG-45} = max[t_a , t_b]
= max[0.1295 , 0.1125]
= 0.1295 in

Available nozzle wall thickness new, t_n = 1.9985 in

The nozzle neck thickness is adequate.

External Pressure, (Corroded & at 200 °F) UG-28(c)

L / D_o = 2.8971 / 11 = 0.2634
D_o / t = 11 / 0.1295 = 84.9390
From table G: A = 0.007881
From table HA-4: B = 11,986.0874 psi

P_a = 4*B / (3*(D_o / t))
= 4*11,986.09 / (3*(11 / 0.1295))
= 188.15 psi

Design thickness for external pressure P_a = 188.15 psi

t_a = t + Corrosion = 0.1295 + 0 = 0.1295"

Nozzle C (C)

ASME Section VIII Division 1, 2010 Edition

$t_{w(lower)}$ = 0.375 in
Leg_{41} = 0.1875 in

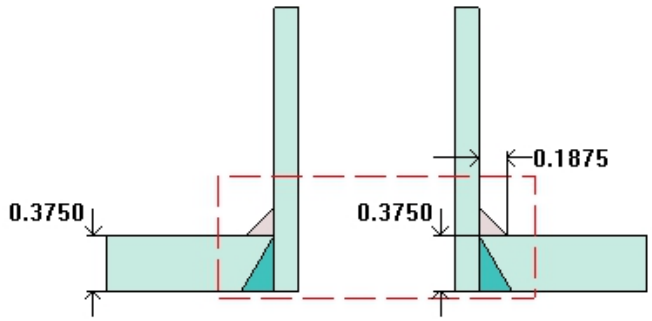

Note: round inside edges per UG-76(c)

Located on:	24 OD Shell
Liquid static head included:	0 psi
Nozzle material specification:	SA-182 F316 <= 5 (II-D p. 70, ln. 17)
Nozzle longitudinal joint efficiency:	1
Nozzle description:	NPS 0.75 Class 3000 - threaded
Nozzle orientation:	60°
Local vessel minimum thickness:	0.375 in
Nozzle center line offset to datum line:	61.27 in
End of nozzle to shell center:	13 in
Nozzle inside diameter, new:	1.05 in
Nozzle nominal wall thickness:	0.1625 in
Nozzle corrosion allowance:	0 in
Projection available outside vessel, Lpr:	1 in

Reinforcement Calculations for Internal Pressure

The vessel wall thickness governs the MAWP of this nozzle.

UG-37 Area Calculation Summary (in^2) For P = 632.92 psi @ 200 °F							UG-45 Nozzle Wall Thickness Summary (in) The nozzle passes UG-45	
A required	A available	A_1	A_2	A_3	A_5	A welds	t_{req}	t_{min}
This nozzle is exempt from area calculations per UG-36(c)(3)(a)							0.0625	0.1625

UG-41 Weld Failure Path Analysis Summary
The nozzle is exempt from weld strength calculations per UW-15(b)(2)

UW-16 Weld Sizing Summary			
Weld description	Required weld throat size (in)	Actual weld throat size (in)	Status
Nozzle to shell fillet (Leg_{41})	0.1138	0.1312	weld size is adequate

Calculations for internal pressure 632.92 psi @ 200 °F

Nozzle Impact test exempt per UHA-51(g)(coincident ratio = 0.0737).

Parallel Limit of reinforcement per UG-40

L_R = MAX(d, R_n + (t_n - C_n) + (t - C))
= MAX(1.05, 0.525 + (0.1625 - 0) + (0.375 - 0))
= 1.0625 in

Outer Normal Limit of reinforcement per UG-40

L_H = MIN(2.5*(t - C), 2.5*(t_n - C_n) + t_e)
= MIN(2.5*(0.375 - 0), 2.5*(0.1625 - 0) + 0)
= 0.4063 in

Nozzle required thickness per UG-27(c)(1)

t_{rn} = P*R_n / (S_n*E - 0.6*P)
= 632.9168*0.525 / (20,000*1 - 0.6*632.9168)
= 0.0169 in

Required thickness t_r from UG-37(a)

t_r = P*R_o / (S*E + 0.4*P)
= 632.9168*12 / (20,000*1 + 0.4*632.9168)
= 0.375 in

This opening does not require reinforcement per UG-36(c)(3)(a)

UW-16(c) Weld Check

Fillet weld: t_{min} = lesser of 0.75 or t_n or t = 0.1625 in
$t_{c(min)}$ = lesser of 0.25 or 0.7*t_{min} = 0.1138 in
$t_{c(actual)}$ = 0.7*Leg = 0.7*0.1875 = 0.1313 in

The fillet weld size is satisfactory.

Weld strength calculations are not required for this detail which conforms to Fig. UW-16.1, sketch (c-e).

ASME B16.11 Coupling Wall Thickness Check

Wall thickness req'd per ASME B16.11 2.1.1:	t_{r1} = 0.0215 in (E =1)
Wall thickness per UG-16(b):	t_{r3} = 0.0625 in

Available nozzle wall thickness new, t_n = 0.1625 in

The nozzle neck thickness is adequate.

Reinforcement Calculations for MAP

The vessel wall thickness governs the MAP of this nozzle.

UG-37 Area Calculation Summary (in^2) For P = 632.92 psi @ 68 °F							UG-45 Nozzle Wall Thickness Summary (in) The nozzle passes UG-45	
A required	A available	A_1	A_2	A_3	A_5	A welds	t_{req}	t_{min}
This nozzle is exempt from area calculations per UG-36(c)(3)(a)							0.0625	0.1625

UG-41 Weld Failure Path Analysis Summary
The nozzle is exempt from weld strength calculations per UW-15(b)(2)

UW-16 Weld Sizing Summary			
Weld description	Required weld throat size (in)	Actual weld throat size (in)	Status
Nozzle to shell fillet (Leg_{41})	0.1138	0.1312	weld size is adequate

Calculations for internal pressure 632.92 psi @ 68 °F

Nozzle Impact test exempt per UHA-51(g)(coincident ratio = 0.0737).

Parallel Limit of reinforcement per UG-40

L_R = MAX(d, R_n + (t_n - C_n) + (t - C))
= MAX(1.05, 0.525 + (0.1625 - 0) + (0.375 - 0))
= 1.0625 in

Outer Normal Limit of reinforcement per UG-40

L_H = MIN(2.5*(t - C), 2.5*(t_n - C_n) + t_e)
= MIN(2.5*(0.375 - 0), 2.5*(0.1625 - 0) + 0)
= 0.4063 in

Nozzle required thickness per UG-27(c)(1)

t_{rn} = P*R_n / (S_n*E - 0.6*P)
= 632.9168*0.525 / (20,000*1 - 0.6*632.9168)
= 0.0169 in

Required thickness t_r from UG-37(a)

t_r = $P*R_o$ / (S*E + 0.4*P)
= 632.9168*12 / (20,000*1 + 0.4*632.9168)
= 0.375 in

This opening does not require reinforcement per UG-36(c)(3)(a)

UW-16(c) Weld Check

Fillet weld: t_{min} = lesser of 0.75 or t_n or t = 0.1625 in
$t_{c(min)}$ = lesser of 0.25 or 0.7*t_{min} = 0.1138 in
$t_{c(actual)}$ = 0.7*Leg = 0.7*0.1875 = 0.1313 in

The fillet weld size is satisfactory.

Weld strength calculations are not required for this detail which conforms to Fig. UW-16.1, sketch (c-e).

ASME B16.11 Coupling Wall Thickness Check

Wall thickness req'd per ASME B16.11 2.1.1:	t_{r1} = 0.0215 in (E =1)
Wall thickness per UG-16(b):	t_{r3} = 0.0625 in

Available nozzle wall thickness new, t_n = 0.1625 in

The nozzle neck thickness is adequate.

Reinforcement Calculations for External Pressure

UG-37 Area Calculation Summary (in^2) For Pe = 188.15 psi @ 200 °F							UG-45 Nozzle Wall Thickness Summary (in) The nozzle passes UG-45	
A required	A available	A_1	A_2	A_3	A_5	A welds	t_{req}	t_{min}
This nozzle is exempt from area calculations per UG-36(c)(3)(a)							0.1125	0.1625

UG-41 Weld Failure Path Analysis Summary
Weld strength calculations are not required for external pressure

UW-16 Weld Sizing Summary			
Weld description	Required weld throat size (in)	Actual weld throat size (in)	Status
Nozzle to shell fillet (Leg_{41})	0.1138	0.1312	weld size is adequate

Calculations for external pressure 188.15 psi @ 200 °F

Parallel Limit of reinforcement per UG-40

L_R = MAX(d, R_n + (t_n - C_n) + (t - C))
= MAX(1.05, 0.525 + (0.1625 - 0) + (0.375 - 0))
= 1.0625 in

Outer Normal Limit of reinforcement per UG-40

L_H = MIN(2.5*(t - C), 2.5*(t_n - C_n) + t_e)
= MIN(2.5*(0.375 - 0), 2.5*(0.1625 - 0) + 0)
= 0.4063 in

Nozzle required thickness per UG-28 t_{rn} = 0.0166 in

From UG-37(d)(1) required thickness t_r = 0.375 in

This opening does not require reinforcement per UG-36(c)(3)(a)

UW-16(c) Weld Check

Fillet weld: t_{min} = lesser of 0.75 or t_n or t = 0.1625 in
$t_{c(min)}$ = lesser of 0.25 or 0.7*t_{min} = 0.1138 in
$t_{c(actual)}$ = 0.7*Leg = 0.7*0.1875 = 0.1313 in

The fillet weld size is satisfactory.

Weld strength calculations are not required for this detail which conforms to Fig. UW-16.1, sketch (c-e).

UG-45 Nozzle Neck Thickness Check

$t_{a\ UG\text{-}28}$ = 0.0166 in

t_a = max[$t_{a\ UG\text{-}28}$, $t_{a\ UG\text{-}22}$]
= max[0.0166 , 0]
= 0.0166 in

t_{b2} = $P*R_o$ / (S*E + 0.4*P) + Corrosion
= 188.1516*12 / (20,000*1 + 0.4*188.1516) + 0
= 0.1125 in

t_{b2} = max[t_{b2} , $t_{b\ UG16}$]
= max[0.1125 , 0.0625]
= 0.1125 in

t_b = min[t_{b3} , t_{b2}]
= min[0.1225 , 0.1125]
= 0.1125 in

$t_{UG\text{-}45}$ = max[t_a , t_b]
= max[0.0166 , 0.1125]
= 0.1125 in

Available nozzle wall thickness new, t_n = 0.1625 in

The nozzle neck thickness is adequate.

External Pressure, (Corroded & at 200 °F) UG-28(c)

L / D_o = 1.0197 / 1.375 = 0.7416
D_o / t = 1.375 / 0.0166 = 83.0024
From table G: A = 0.002485
From table HA-2: B = 11,712.9731 psi

P_a = 4*B / (3*(D_o / t))
= 4*11,712.97 / (3*(1.375 / 0.0166))
= 188.15 psi

Design thickness for external pressure P_a = 188.15 psi

t_a = t + Corrosion = 0.0166 + 0 = 0.0166"

Legs #1

Leg material:			
Leg description:			3 inch sch 40 pipe
Number of legs:	N =	3	
Overall length:		34	in
Base to girth seam length:		27.2	in
Bolt circle:		48.75	in
Anchor bolt size:		0.5	inch series 8 threaded
Anchor bolt material:			A-325
Anchor bolts/leg:		3	
Anchor bolt allowable stress:	S_b =	20,000	psi
Anchor bolt corrosion allowance:		0	in
Anchor bolt hole clearance:		0.125	in
Base plate width:		4	in
Base plate length:		4	in
Base plate thickness:		0.375	in (0.0256 in required)
Base plate allowable stress:		24,000	psi
Foundation allowable bearing stress:		1,658	psi
Effective length coefficient:	K =	1.2	
Coefficient:	C_m =	0.85	
Leg yield stress:	F_y =	36,000	psi
Leg elastic modulus:	E =	29,000,000	psi
Leg to shell fillet weld:		0.25	in (0.0105 in required)
Legs braced:		No	

Note: The support attachment point is assumed to be 1 in up from the cylinder circumferential seam.

Loading	Force attack angle °	Leg position °	Axial end load lb_f	Shear resisted lb_f	Axial f_a psi	Bending f_{bx} psi	Bending f_{by} psi	Ratio H_{1-1}	Ratio H_{1-2}
Governing Condition		0	594.5	0.0	267	603	0	0.0349	0.0377
		120	673.7	0.0	302	683	0	0.0396	0.0427
Weight operating corroded		240	673.7	0.0	302	683	0	0.0396	0.0427
Moment = 59.4 lb_f-ft	**0**								

Loading	Force attack angle °	Leg position °	Axial end load lb_f	Shear resisted lb_f	Axial f_a psi	Bending f_{bx} psi	Bending f_{by} psi	Ratio H_{1-1}	Ratio H_{1-2}
Weight empty corroded		0	594.5	0.0	267	603	0	0.0349	0.0377
		120	673.7	0.0	302	683	0	0.0396	0.0427
Moment = 59.4 lb_f-ft	**0**	240	673.7	0.0	302	683	0	0.0396	0.0427

Loading	Force attack angle °	Leg position °	Axial end load lb_f	Shear resisted lb_f	Axial f_a psi	Bending f_{bx} psi	Bending f_{by} psi	Ratio H_{1-1}	Ratio H_{1-2}
Weight vacuum corroded		0	594.5	0.0	267	603	0	0.0349	0.0377
		120	673.7	0.0	302	683	0	0.0396	0.0427
Moment = 59.4 lb_f-ft	0	240	673.7	0.0	302	683	0	0.0396	0.0427

Leg Calculations (AISC manual ninth edition)

Axial end load, P_1 **(Based on vessel total bending moment acting at leg attachment elevation)**

$P_1 = W / N + 48*M_t / (N*D)$
$= 1{,}902.29 / 3 + 48*59.4 / (3*24)$
$= 673.7\ lb_f$

Allowable axial compressive stress, F_a (AISC chapter E)

$C_c = Sqr(2*\pi^2*E / F_y)$
$= Sqr(2*\pi^2*29{,}000{,}000 / 36{,}000)$
$= 126.0993$

$K*l / r = 1.2*28.2 / 1.1637 = 29.079$

$F_a = 1 * (1 - (K*l / r)^2 / (2*C_c^2))*F_y / (5 / 3 + 3*(K*l / r) / (8*C_c)-(K*l / r)^3 / (8*C_c^3))$
$= 1 * (1 - (29.079)^2 / (2*126.0993^2))*36{,}000 / (5 / 3 + 3*(29.079) / (8*126.0993)-(29.079)^3 / (8*126.0993^3))$
$= 20{,}006$ psi

Allowable axial compression and bending (AISC chapter H)

$F'_{ex} = 1*12*\pi^2*E / (23*(K*l / r)^2)$
$= 1*12*\pi^2*29{,}000{,}000 / (23*(29.079)^2)$
$= 176{,}601$ psi

$F'_{ey} = 1*12*\pi^2*E / (23*(K*l / r)^2)$
$= 1*12*\pi^2*29{,}000{,}000 / (23*(29.079)^2)$
$= 176{,}601$ psi

$F_b = 1*0.66*F_y$
$= 1*0.66*36{,}000$
$= 23{,}760$ psi

Compressive axial stress

$f_a = P_1 / A$
$= 673.7 / 2.23$
$= 302$ psi

Bending stresses

$f_{bx} = F*\cos(\alpha)*L / (I_x / C_x) + P_1*E_{cc} / (I_x / C_x)$
$= 0*abs(\cos(120))*28.2 / (3.02 / 1.75) + 673.7*1.75 / (3.02 / 1.75)$
$= 683$ psi

$f_{by}= F*\sin(\alpha)*L / (I_y / C_y)$
$= 0*\sin(120)*28.2 / (3.02 / 1.75)$
$= 0$ psi

AISC equation H_{1-1}

$H_{1-1} = f_a / F_a + C_{mx}*f_{bx} / ((1 - f_a / F'_{ex})*F_{bx}) + C_{my}*f_{by} / ((1 - f_a / F'_{ey})*F_{by})$
$= 302 / 20{,}006 + 0.85*683 / ((1 - 302 / 176{,}601)*23{,}760) + 0.85*0 / ((1 - 302 / 176{,}601)*23{,}760)$
$= 0.0396$

AISC equation H_{1-2}

$H_{1-2} = f_a / (0.6*1*F_y) + f_{bx} / F_{bx} + f_{by} / F_{by}$
$= 302 / (0.6*1*36{,}000) + 683 / 23{,}760 + 0 / 23{,}760$
$= 0.0427$

3, 3 inch sch 40 pipe legs are adequate.

Anchor bolts - Weight operating corroded condition governs

Tensile loading per leg (3 bolts per leg)

$R = 48*M / (N*BC) - W / N$
$= 48*59.4 / (3*48.75) - 1,902.29 / 3$
$= -614.6\ lb_f$
There is no net uplift (R is negative).

0.5 inch series 8 threaded bolts are satisfactory.

Check the leg to vessel fillet weld, Bednar 10.3, Weight operating corroded governs

Note: continuous welding is assumed for all support leg fillet welds.

$Z_w = (2*b*d + d^2) / 3$
$= (2*1.8028*5.8 + 5.8^2) / 3$
$= 18.1841\ in^2$

$J_w = (b + 2*d)^3 / 12 - d^2*(b + d)^2 / (b + 2*d)$
$= (1.8028 + 2*5.8)^3 / 12 - 5.8^2*(1.8028 + 5.8)^2 / (1.8028 + 2*5.8)$
$= 55.5539\ in^3$

$E = d^2 / (b + 2*d)$
$= 5.8^2 / (1.8028 + 2*5.8)$
$= 2.509928\ in$

Governing weld load $f_x = Cos(120)*0 = 0\ lb_f$
Governing weld load $f_y = Sin(120)*0 = 0\ lb_f$

$f_1 = P_1 / L_{weld}$
$= 673.7 / 13.4028$
$= 50.27\ lb_f/in$ (V_L direct shear)

$f_2 = f_y*L_{leg}*0.5*b / J_w$
$= 0*28.2*0.5*1.8028 / 55.5539$
$= 0\ lb_f/in$ (V_L torsion shear)

$f_3 = f_y / L_{weld}$
$= 0 / 13.4028$
$= 0\ lb_f/in$ (V_c direct shear)

$f_4 = f_y*L_{leg}*E / J_w$
$= 0*28.2*2.5099 / 55.5539$
$= 0\ lb_f/in$ (V_c torsion shear)

$f_5 = (f_x*L_{leg} + P_1*E_{cc}) / Z_w$
$= (0*28.2 + 673.7*1.75) / 18.1841$
$= 64.84\ lb_f/in$ (M_L bending)

$f_6 = f_x / L_{weld}$
$= 0 / 13.4028$
$= 0\ lb_f/in$ (Direct outward radial shear)

$f = Sqr((f_1 + f_2)^2 + (f_3 + f_4)^2 + (f_5 + f_6)^2)$
$= Sqr((50.27 + 0)^2 + (0 + 0)^2 + (64.84 + 0)^2)$
$= 82.04$ lb_f/in (Resultant shear load)

Required leg to vessel fillet weld leg size (welded both sides + top)

$t_w = f / (0.707*0.55*S_a)$
$= 82.04 / (0.707*0.55*20,000)$
$=$ 0.0105 in

The 0.25 in leg to vessel attachment fillet weld size is adequate.

Base plate thickness check, AISC 3-106

$f_p = P / (B*N)$
$= 653.59 / (4*4)$
$= 41$ psi

$t_b =(N - (d - t_L)) / 2*Sqr(3*f_p / S_b)$
$=(4 - (3.5 - 0.216)) / 2*Sqr(3*41 / 24,000)$
$=$ 0.0256 in

The base plate thickness is adequate.

Check the leg to vessel attachment stresses, WRC-107 (Weight operating corroded governs)

Applied Loads

Radial load:	$P_r =$	0	lb_f
Circumferential moment:	$M_c =$	0	lb_f-in
Circumferential shear:	$V_c =$	0	lb_f
Longitudinal moment:	$M_L =$	1,178.97	lb_f-in
Longitudinal shear:	$V_L =$	673.7	lb_f
Torsion moment:	$M_t =$	0	lb_f-in
Internal pressure:	$P =$	450	psi
Mean shell radius:	$R_m =$	11.8125	in
Local shell thickness:	$t =$	0.375	in
Shell yield stress:	$S_y =$	25,900	psi

Maximum stresses due to the applied loads at the leg edge (includes pressure)

R_m / t = 11.8125 / 0.375 = 31.5

C_1 = 0.9014, C_2 = 3.6056 in

Note: Actual lug C_1 / C_2 < 1 / 4, C_1 / C_2 = 1 / 4 used as this is the minimum ratio covered by WRC 107.

Local circumferential pressure stress = $P*R_i$ / t =13,950 psi

Local longitudinal pressure stress = $P*R_i$ / (2*t) =6,975 psi

Maximum combined stress (P_L+P_b+Q) = 15,107 psi
Allowable combined stress (P_L+P_b+Q) = +-3*S = +-60,000 psi

Note: The allowable combined stress (P_L+P_b+Q) is based on the strain hardening characteristics of this material.

The maximum combined stress (P_L+P_b+Q) is within allowable limits.

Maximum local primary membrane stress (P_L) = 14,212 psi
Allowable local primary membrane (P_L) = +-1.5*S = +-30,000 psi

The maximum local primary membrane stress (P_L) is within allowable limits.

Stresses at the leg edge per WRC Bulletin 107										
Figure	**value**	**β**	**A_u**	**A_l**	**B_u**	**B_l**	**C_u**	**C_l**	**D_u**	**D_l**
3C*	2.7451	0.2259	0	0	0	0	0	0	0	0
4C*	4.7094	0.1831	0	0	0	0	0	0	0	0
1C	0.1131	0.1343	0	0	0	0	0	0	0	0
2C-1	0.0767	0.1343	0	0	0	0	0	0	0	0
3A*	1.0174	0.1211	0	0	0	0	0	0	0	0
1A	0.0897	0.1547	0	0	0	0	0	0	0	0
3B*	3.4609	0.1923	-262	-262	262	262	0	0	0	0
1B-1	0.0356	0.1694	-895	895	895	-895	0	0	0	0
Pressure stress*			13,950	13,950	13,950	13,950	13,950	13,950	13,950	13,950
Total circumferential stress			12,793	14,583	15,107	13,317	13,950	13,950	13,950	13,950
Primary membrane circumferential stress*			13,688	13,688	14,212	14,212	13,950	13,950	13,950	13,950
3C*	3.3917	0.1831	0	0	0	0	0	0	0	0
4C*	4.3045	0.2259	0	0	0	0	0	0	0	0
1C-1	0.0845	0.1908	0	0	0	0	0	0	0	0
2C	0.0483	0.1908	0	0	0	0	0	0	0	0
4A*	1.5104	0.1211	0	0	0	0	0	0	0	0
2A	0.0418	0.2103	0	0	0	0	0	0	0	0
4B*	1.2512	0.1923	-171	-171	171	171	0	0	0	0
2B-1	0.0422	0.2339	-768	768	768	-768	0	0	0	0
Pressure stress*			6,975	6,975	6,975	6,975	6,975	6,975	6,975	6,975
Total longitudinal stress			6,036	7,572	7,914	6,378	6,975	6,975	6,975	6,975
Primary membrane longitudinal stress*			6,804	6,804	7,146	7,146	6,975	6,975	6,975	6,975

Shear from M_t	0	0	0	0	0	0	0	0
Circ shear from V_c	0	0	0	0	0	0	0	0
Long shear from V_L	0	0	0	0	-125	-125	125	125
Total Shear stress	0	0	0	0	-125	-125	125	125
Combined stress (P_L+P_b+Q)	12,793	14,583	15,107	13,317	13,952	13,952	13,952	13,952

Note: * denotes primary stress.

Welded Cover

ASME Section VIII Division 1, 2010 Edition

Component: Welded Cover
Attached to: 24 OD Shell
Material specification: SA-240 316L (II-D p. 66, ln. 27)
Rated MDMT per UHA-51(d)(1)(a) = -320 °F

Internal design pressure: P = 450 psi @ 200 °F
External design pressure: P_e = 20.5 psi @ 200 °F

Static liquid head:

P_{th} = 0.85 psi (SG = 1, H_s = 23.625", Horizontal test head)

Corrosion allowance: Inner C = 0" Outer C = 0"

Design MDMT = -20 °F
Rated MDMT = -320 °F

No impact test performed
Material is not normalized
Material is not produced to Fine Grain Practice
PWHT is not performed

Radiography: Category A joints - Seamless No RT

Estimated weight: New = 393.9 lb corr = 393.9 lb

Head diameter, d = 23.25"
Cover thickness, t = 4.5"

Factor C from Fig. UG-34, sketch (b-2), (e through g)

C = $0.33*t_r / t_s$
= 0.33*0.2651 / 0.375
= 0.2333

Note: Factor C has been increased per UG-39(d)

Design thickness, (at 200 °F) UG-34 (c)(2)

t = d*Sqr(C*P / (S*E)) + Corrosion
= 23.25*Sqr(0.4666*450 / (16,700*1)) + 0
= 2.607"

Maximum allowable working pressure, (at 200 °F)

C = $0.33*t_r / t_s$
= 0.33*0.375 / 0.375
= 0.33

MAWP = $(S*E / C)*(t / d)^2 - P_s$
= $(16,700*1 / 0.5)*(4.5 / 23.25)^2 - 0$
= 1,251.22 psi

Attached shell limits MAWP to 632.91 psi

Maximum allowable pressure, (At 68 °F)

C = $0.33*t_r / t_s$
= 0.33*0.375 / 0.375
= 0.33

MAP = $(S*E / C)*(t / d)^2$
= $(16,700*1 / 0.5)*(4.5 / 23.25)^2$
= 1,251.22 psi

Attached shell limits MAWP to 632.91 psi

Design thickness for external pressure, (at 200 °F) UG-34(c)(2)

t = $d*Sqr(C*P_e / (S*E)) + Corrosion$
= 23.25*Sqr(0.5*20.5 / (16,700*1)) + 0
= 0.576"

Maximum allowable external pressure, (At 200 °F)

MAEP = $(S*E / C)*(t / d)^2$
= $(16,700*1 / 0.5)*(4.5 / 23.25)^2$
= 1,251.2 psi

Fermi National Accelerator Laboratory
24" OD Vertical COUPP Bubble Chamber
TODD CLARK, P. ENG.
PV Elite 2012 Licensee: ALL-WELD COMPANY LTD.
FileName : 9833 ----------
Flange Analysis : Item 4/1 Item: 1 11:03a Mar 5,2012

Input Echo, Flange Item 1, Description: Item 4/1

Description of Flange Geometry (Type)		Reverse Weld Neck	
Description of Flange Analysis		Partial, Thickness	
Print Final Results for Given Thickness		Yes	
Design Pressure	P	450.00	psig
Design Temperature		200.00	F
Corrosion Allowance	ci	0.0000	in.
Flange Inside Diameter	B'	7.003	in.
Flange Outside Diameter	A	10.938	in.
Flange Thickness	t	3.0000	in.
Perform thickness calcs. based on rigidity		Yes	
Flange Material		SA-240 316L	
Flange Material UNS Number		S31603	
Flange Allowable Stress At Temperature	Sfo	16700.00	psi
Flange Allowable Stress At Ambient	Sfa	16700.00	psi
Bolt Material		SA-193 B7	
Bolt Allowable Stress At Temperature	Sb	25000.00	psi
Bolt Allowable Stress At Ambient	Sa	25000.00	psi
Diameter of Bolt Circle	C	9.250	in.
Nominal Bolt Diameter	dB	0.7500	in.
Type of Thread Series		UNC Thread Series	
Number of Bolts	n	8	
Compute Full Flange Design Bolt Load (S*ab) ?		No	
Flange Face Outside Diameter	Fod	7.222	in.
Flange Face Inside Diameter	Fid	7.003	in.
Flange Facing Sketch		Code Sketch 1a	
Gasket Outside Diameter	Go	7.222	in.
Gasket Inside Diameter	Gi	7.003	in.
Gasket Factor,	m	0.0000	
Gasket Design Seating Stress	y	0.00	psi
Column for Gasket Seating		2, Code Column II	
Gasket Thickness	tg	0.2750	in.
Shell Material		SA-240 316L	
Shell Material UNS Number		S31603	
Shell Allowable Stress At Temperature	So	16700.00	psi
Shell Allowable Stress At Ambient	Sa	16700.00	psi
Full face Gasket Flange Option		Program Selects	

ASME Code, Section VIII, Division 1, 2011a

Hub Small End Required Thickness due to Internal Pressure:
= (P*(D/2+Ca))/(S*E-0.6*P) per UG-27 (c)(1)

```
  = (450.00*(7.0030/2+0.0000))/(16700.00*1.00-0.6*450.00)+Ca
```
= 0.0959 in. Warning: Less than specified Small End Hub thickness

Flange analysis, Flange number 1, Description: Item 4/1
ASME Code, Section VIII, Division 1, App. 2, 2011a

```
Corroded Flange ID,     B'cor = B'+2.0*ci                 7.003  in.
Corroded Shell ID,       Bcor = A+2(ci - go)             10.938  in.
Corroded Large Hub,     g1cor = g1-ci                     0.000  in.
Corroded Small Hub,     g0cor = g0-ci                     0.000  in.
Code R Dimension,           R = (C-B)/2 - g1              1.124  in.

Gasket Contact Width,       N = (Goc-Gic) / 2             0.109  in.
Basic Gasket Width,        b0 = N / 2.0                   0.055  in.
Effective Gasket Width,     b = b0                        0.055  in.
Gasket Reaction Diameter,   G = Go (Self-Energizing)      7.222  in.
```

Basic Flange and Bolt loads:

Hydrostatic End Load due to Pressure[H]:
```
  = 0.785 * G * G * Peq
  = 0.7854 * 7.2220 *7.2220 *450.0000
  = 18433.904 lb.
```

Contact Load on Gasket Surfaces[Hp]:
```
  = 2 * b * PI * G * m * P
  = 2 * 0.0547 * 3.1416 * 7.2220 * 0.0000 * 450.00
  = 0.000 lb.
```

Hydrostatic End Load at Flange ID[Hd]:
```
  = 0.785 * Bcor * Bcor * P
  = 0.785 * 10.9375 * 10.9375 *450.0000
  = 42280.348 lb.
```

Pressure Force on Flange Face[Ht]:
```
  = H - Hd
  = 18433 - 42280
  = -23846.443 lb.
```

Operating Bolt Load[Wm1]:
```
  = H + Hp +  H'p (cannot be < 0)
  = ( 18433 + 0 + 0 )
  = 18433.904 lb.
```

Gasket Seating Bolt Load[Wm2]:
```
  = y * b * PI * G  + yPart * bPart * lp
  = 0.00*0.0547*3.141*7.222+0.00*0.0000*0.00
  = 0.000 lb.
```

Required Bolt Area[Am]:
```
  = Maximum of Wm1/Sb, Wm2/Sa
  = Maximum of 18433 / 25000 , 0 / 25000
  = 0.737356 in²
```

ASME Maximum Circumferential Spacing between Bolts per App. 2 eq. (3) [Bsmax]:

```
= 2a + 6t/(m + 0.5)
= 2 * 0.750 + 6 * 3.000 /(0.00 + 0.5)
= 37.500 in.
```

Actual Circumferential Bolt Spacing [Bs]:

```
= C * sin( pi / n ) )
= 9.250 * sin( 3.142 / 8 )
= 3.540 in.
```

ASME Moment Multiplier for Bolt Spacing per App. 2 eq. (7) [Bsc]:

```
= max( sqrt( Bs/( 2a + t )), 1 )
= max( sqrt( 3.540 /( 2 * 0.750 + 3.000 )), 1 )
= 1.0000
```

Bolting Information for UNC Thread Series (Non Mandatory):

	Minimum	Actual	Maximum
Bolt Area, in²	0.737	2.416	
Radial distance bet. bolts and the edge	0.812	0.844	
Circumferential spacing between bolts	1.750	3.540	37.500

Flange Design Bolt Load, Gasket Seating[W]:

```
= Sa * ( Am + Ab ) / 2.0
= 25000.00 * ( 0.7374 + 2.4160 ) / 2.0
= 39416.95 lb.
```

Gasket Seating Force[Hg]:

```
= Wm1 - H
= 18433 - 18433
= 0.00 lb.
```

<u>Moment Arm Calculations:</u>

Distance to Gasket Load Reaction[hg]:

```
= (C - G ) / 2.0
= ( 9.2500 - 7.2220 ) / 2.0
= 1.0140 in.
```

Distance to Face Pressure Reaction[ht]:

```
= ( C - ( Bcor + G ) / 2.0 ) / 2.0
= ( 9.2500 - ( 10.9375 + 7.2220 ) / 2.0 ) / 2.0
= 0.0851 in.
```

Distance to End Pressure Reaction[hd]:

```
= ( C + g1cor - 2.0 * g0cor - Bcor ) / 2.0
= ( 9.2500 + 0.0000 - 2.0 * 0.0000 - 10.9375 ) / 2.0
= -0.8438 in.
```

Summary of Moments for Internal Pressure:

Loading	Force	Distance	Bolt Corr	Moment

Fermi National Accelerator Laboratory
24" OD Vertical COUPP Bubble Chamber
TODD CLARK, P. ENG.
PV Elite 2012 Licensee: ALL-WELD COMPANY LTD.
FileName : 9833 ----------
Flange Analysis : Item 4/1 Item: 1 11:03a Mar 5,2012

End Pressure,	Md	42280.	-0.8438	1.0000	-2973.	ft.lb.
Face Pressure,	Mt	-23846.	0.0851	1.0000	-169.	ft.lb.
Gasket Load,	Mg	0.	1.0140	1.0000	0.	ft.lb.
Gasket Seating,	Ma	39417.	1.0140	1.0000	3331.	ft.lb.

Total Moment for Operation,	Mo	-3142.	ft.lb.
Total Moment for Gaket Seating,	Ma	3331.	ft.lb.

Effective Hub Length, ho =	0.000	in.
Hub Ratio, h/ho = Defined as 0.0	0.000	
Thickness Ratio, g1/g0 = Defined as 0.0	0.000	

Factors from Figure 2-7.1 (Reverse)		K =	1.562
Tr =	1.225	Ur =	2.812
Y =	4.529	Z =	2.390
Yr =	2.559	Alphar =	0.565

Tangential Flange Stress, Operating[Sto]:
= (Y * Mo) / (t^2 * Bcor)
= (4.5290 * -37703) / (3.0000^2 * 7.0030)
= 2709.3 psi

Tangential Flange Stress, Seating[Sta]:
= (Y * Ma) / (t^2 * Bcor)
= (4.5290 * 39968) / (3.0000^2 * 7.0030)
= 2872.1 psi

Bolt Stress, Operating[Bso]:
= (Wm1 / Ab)
= (18433 / 2.4160)
= 7629.9 psi

Bolt Stress, Seating[Bsa]:
= (Wm2 / Ab)
= (0 / 2.4160)
= 0.0 psi

Stress Computation Results:

	Operating		Gasket Seating		
	Actual	Allowed	Actual	Allowed	
Tangential Flange	2709.	16700.	2872.	16700.	psi
Bolting	7630.	25000.	0.	25000.	psi
Reverse Flange	0.	16700.	0.	16700.	psi

Minimum Required Flange Thickness + CA	1.318	in.
Estimated M.A.W.P. (Operating)	1474.45	psig
Estimated Finished Weight of Flange	48.2	lb.
Estimated Unfinished Weight of Forging	48.2	lb.

Flange Rigidity Index, Seating (rotation check) per APP. 2 [Js]:
= 109.4 * Ma / Bsc * Cnv_fac / (Eamb * t^3 * ln(K) * Kl)
= 109.4 * 3330.7 / 1.0000 * 12.000 / (.28300E+08 * 3.000^3
* 0.446 * 0.20)

```
  = 0.064  (should be <= 1)
```

Flange Rigidity Index Operating (rotation check) per APP. 2 [J]:

```
  = 109.4 * Mo / Bsc * Cnv_fac / ( Eop * tc^3 * ln(K) * Kl )
  = 109.4 * 3142.0 / 1.0000 * 12.000 / ( .27500E+08 * 3.000 ^3
    * 0.446 * 0.20 )
  = 0.062  (should be <= 1)
```

Note: Flange MDMT skipped as Flange is not a Carbon Steel.

PV Elite is a trademark of Intergraph CADWorx & Analysis Solutions, Inc. 2012

Fermi National Accelerator Laboratory
24" OD Vertical COUPP Bubble Chamber
TODD CLARK, P. ENG.
PV Elite 2012 Licensee: ALL-WELD COMPANY LTD.
FileName : 9833 ----------
Flange Analysis : Item 3/1 Item: 2 11:03a Mar 5,2012

Input Echo, Flange Item 2, Description: Item 3/1

Description of Flange Geometry (Type)		Reverse Weld Neck	
Description of Flange Analysis		Partial, Thickness	
Print Final Results for Given Thickness		Yes	
Design Pressure	P	450.00	psig
Design Temperature		200.00	F
Corrosion Allowance	ci	0.0000	in.
Flange Inside Diameter	B'	7.003	in.
Flange Outside Diameter	A	10.938	in.
Flange Thickness	t	3.0000	in.
Perform thickness calcs. based on rigidity		Yes	
Flange Material		SA-240 316L	
Flange Material UNS Number		S31603	
Flange Allowable Stress At Temperature	Sfo	16700.00	psi
Flange Allowable Stress At Ambient	Sfa	16700.00	psi
Bolt Material		SA-193 B7	
Bolt Allowable Stress At Temperature	Sb	25000.00	psi
Bolt Allowable Stress At Ambient	Sa	25000.00	psi
Diameter of Bolt Circle	C	9.250	in.
Nominal Bolt Diameter	dB	0.7500	in.
Type of Thread Series		UNC Thread Series	
Number of Bolts	n	8	
Compute Full Flange Design Bolt Load (S*ab) ?		No	
Flange Face Outside Diameter	Fod	7.222	in.
Flange Face Inside Diameter	Fid	7.003	in.
Flange Facing Sketch		Code Sketch 1a	
Gasket Outside Diameter	Go	7.222	in.
Gasket Inside Diameter	Gi	7.003	in.
Gasket Factor,	m	0.0000	
Gasket Design Seating Stress	y	0.00	psi
Column for Gasket Seating		2, Code Column II	
Gasket Thickness	tg	0.2750	in.
Shell Material		SA-240 316L	
Shell Material UNS Number		S31603	
Shell Allowable Stress At Temperature	So	16700.00	psi
Shell Allowable Stress At Ambient	Sa	16700.00	psi
Full face Gasket Flange Option		Program Selects	

ASME Code, Section VIII, Division 1, 2011a

Hub Small End Required Thickness due to Internal Pressure:
= (P*(D/2+Ca))/(S*E-0.6*P) per UG-27 (c)(1)

```
  = (450.00*(7.0030/2+0.0000))/(16700.00*1.00-0.6*450.00)+Ca
```
= 0.0959 in. Warning: Less than specified Small End Hub thickness

<u>Flange analysis, Flange number 2, Description: Item 3/1</u>
ASME Code, Section VIII, Division 1, App. 2, 2011a

```
Corroded Flange ID,     B'cor = B'+2.0*ci                 7.003  in.
Corroded Shell ID,       Bcor = A+2(ci - go)             10.938  in.
Corroded Large Hub,     g1cor = g1-ci                     0.000  in.
Corroded Small Hub,     g0cor = g0-ci                     0.000  in.
Code R Dimension,           R = (C-B)/2 - g1              1.124  in.

Gasket Contact Width,       N = (Goc-Gic) / 2             0.109  in.
Basic Gasket Width,        b0 = N / 2.0                   0.055  in.
Effective Gasket Width,     b = b0                        0.055  in.
Gasket Reaction Diameter,   G = Go (Self-Energizing)      7.222  in.
```

<u>Basic Flange and Bolt loads:</u>

Hydrostatic End Load due to Pressure[H]:
```
  = 0.785 * G * G * Peq
  = 0.7854 * 7.2220 *7.2220 *450.0000
  = 18433.904 lb.
```

Contact Load on Gasket Surfaces[Hp]:
```
  = 2 * b * PI * G * m * P
  = 2 * 0.0547 * 3.1416 * 7.2220 * 0.0000 * 450.00
  = 0.000 lb.
```

Hydrostatic End Load at Flange ID[Hd]:
```
  = 0.785 * Bcor * Bcor * P
  = 0.785 * 10.9375 * 10.9375 *450.0000
  = 42280.348 lb.
```

Pressure Force on Flange Face[Ht]:
```
  = H - Hd
  = 18433 - 42280
  = -23846.443 lb.
```

Operating Bolt Load[Wm1]:
```
  = H + Hp +  H'p (cannot be < 0)
  = ( 18433 + 0 + 0 )
  = 18433.904 lb.
```

Gasket Seating Bolt Load[Wm2]:
```
  = y * b * PI * G  + yPart * bPart * lp
  = 0.00*0.0547*3.141*7.222+0.00*0.0000*0.00
  = 0.000 lb.
```

Required Bolt Area[Am]:
```
  = Maximum of Wm1/Sb, Wm2/Sa
  = Maximum of 18433 / 25000 , 0 / 25000
  = 0.737356 in²
```

ASME Maximum Circumferential Spacing between Bolts per App. 2 eq. (3) [Bsmax]:

```
= 2a + 6t/(m + 0.5)
= 2 * 0.750 + 6 * 3.000 /(0.00 + 0.5)
= 37.500 in.
```

Actual Circumferential Bolt Spacing [Bs]:

```
= C * sin( pi / n ) )
= 9.250 * sin( 3.142 / 8 )
= 3.540 in.
```

ASME Moment Multiplier for Bolt Spacing per App. 2 eq. (7) [Bsc]:

```
= max( sqrt( Bs/( 2a + t )), 1 )
= max( sqrt( 3.540 /( 2 * 0.750 + 3.000 )), 1 )
= 1.0000
```

Bolting Information for UNC Thread Series (Non Mandatory):

	Minimum	Actual	Maximum
Bolt Area, in²	0.737	2.416	
Radial distance bet. bolts and the edge	0.812	0.844	
Circumferential spacing between bolts	1.750	3.540	37.500

Flange Design Bolt Load, Gasket Seating[W]:

```
= Sa * ( Am + Ab ) / 2.0
= 25000.00 * ( 0.7374 + 2.4160 ) / 2.0
= 39416.95 lb.
```

Gasket Seating Force[Hg]:

```
= Wm1 - H
= 18433 - 18433
= 0.00 lb.
```

<u>Moment Arm Calculations:</u>

Distance to Gasket Load Reaction[hg]:

```
= (C - G ) / 2.0
= ( 9.2500 - 7.2220 ) / 2.0
= 1.0140 in.
```

Distance to Face Pressure Reaction[ht]:

```
= ( C - ( Bcor + G ) / 2.0 ) / 2.0
= ( 9.2500 - ( 10.9375 + 7.2220 ) / 2.0 ) / 2.0
= 0.0851 in.
```

Distance to End Pressure Reaction[hd]:

```
= ( C + g1cor - 2.0 * g0cor - Bcor ) / 2.0
= ( 9.2500 + 0.0000 - 2.0 * 0.0000 - 10.9375 ) / 2.0
= -0.8438 in.
```

Summary of Moments for Internal Pressure:

Loading	Force	Distance	Bolt Corr	Moment

Fermi National Accelerator Laboratory
24" OD Vertical COUPP Bubble Chamber
TODD CLARK, P. ENG.
PV Elite 2012 Licensee: ALL-WELD COMPANY LTD.
FileName : 9833 ----------
Flange Analysis : Item 3/1 Item: 2 11:03a Mar 5,2012

End Pressure,	Md	42280.	-0.8438	1.0000	-2973. ft.lb.
Face Pressure,	Mt	-23846.	0.0851	1.0000	-169. ft.lb.
Gasket Load,	Mg	0.	1.0140	1.0000	0. ft.lb.
Gasket Seating,	Ma	39417.	1.0140	1.0000	3331. ft.lb.

Total Moment for Operation, Mo -3142. ft.lb.
Total Moment for Gaket Seating, Ma 3331. ft.lb.

Effective Hub Length, ho = 0.000 in.
Hub Ratio, h/ho = Defined as 0.0 0.000
Thickness Ratio, g1/g0 = Defined as 0.0 0.000

Factors from Figure 2-7.1 (Reverse) K = 1.562
Tr = 1.225 Ur = 2.812
Y = 4.529 Z = 2.390
Yr = 2.559 Alphar = 0.565

Tangential Flange Stress, Operating[Sto]:
= (Y * Mo) / (t^2 * Bcor)
= (4.5290 * -37703) / (3.0000^2 * 7.0030)
= 2709.3 psi

Tangential Flange Stress, Seating[Sta]:
= (Y * Ma) / (t^2 * Bcor)
= (4.5290 * 39968) / (3.0000^2 * 7.0030)
= 2872.1 psi

Bolt Stress, Operating[Bso]:
= (Wm1 / Ab)
= (18433 / 2.4160)
= 7629.9 psi

Bolt Stress, Seating[Bsa]:
= (Wm2 / Ab)
= (0 / 2.4160)
= 0.0 psi

Stress Computation Results:

	Operating		Gasket Seating		
	Actual	Allowed	Actual	Allowed	
Tangential Flange	2709.	16700.	2872.	16700.	psi
Bolting	7630.	25000.	0.	25000.	psi
Reverse Flange	0.	16700.	0.	16700.	psi

Minimum Required Flange Thickness + CA 1.318 in.
Estimated M.A.W.P. (Operating) 1474.45 psig
Estimated Finished Weight of Flange 48.2 lb.
Estimated Unfinished Weight of Forging 48.2 lb.

Flange Rigidity Index, Seating (rotation check) per APP. 2 [Js]:
= 109.4 * Ma / Bsc * Cnv_fac / (Eamb * t^3 * ln(K) * Kl)
= 109.4 * 3330.7 / 1.0000 * 12.000 / (.28300E+08 * 3.000^3
* 0.446 * 0.20)

```
  = 0.064  (should be <= 1)
```

Flange Rigidity Index Operating (rotation check) per APP. 2 [J]:

```
  = 109.4 * Mo / Bsc * Cnv_fac / ( Eop * tc^3 * ln(K) * Kl )
  = 109.4 * 3142.0 / 1.0000 * 12.000 / ( .27500E+08 * 3.000 ^3
    * 0.446 * 0.20 )
  = 0.062  (should be <= 1)
```

Note: Flange MDMT skipped as Flange is not a Carbon Steel.

PV Elite is a trademark of Intergraph CADWorx & Analysis Solutions, Inc. 2012