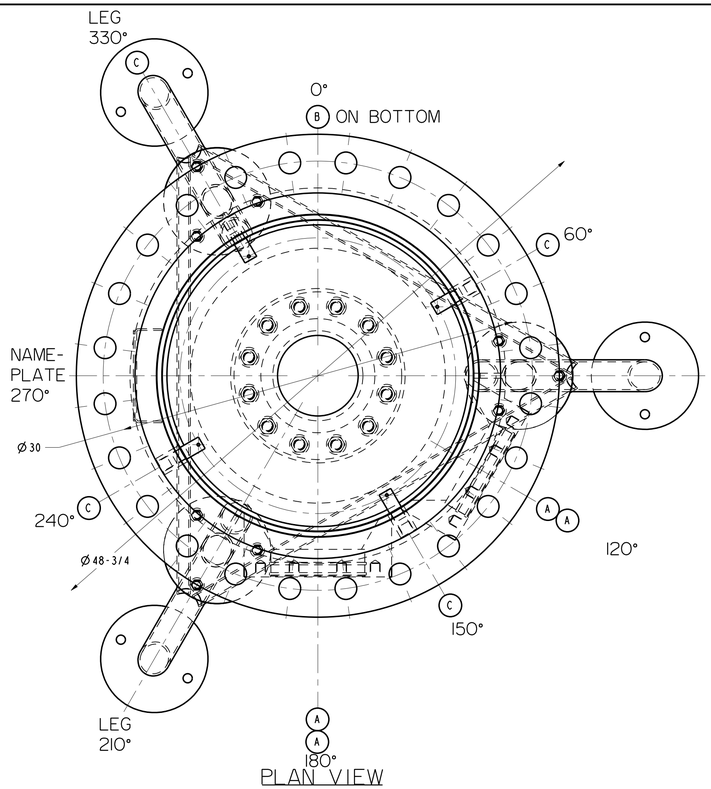

PLAN VIEW
(TRUE ORIENTATION)

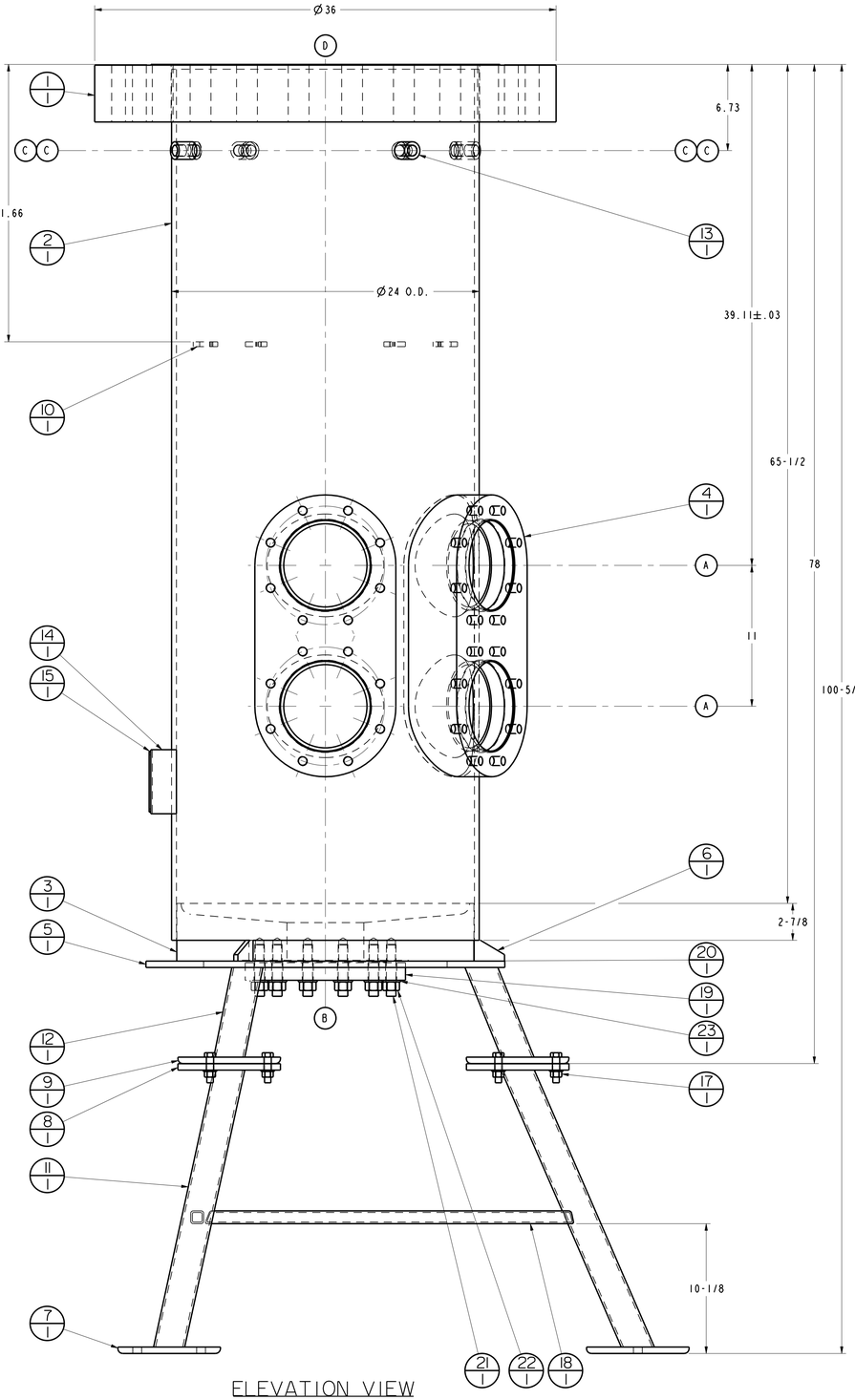

ELEVATION VIEW
(VIEW FROM 180°)

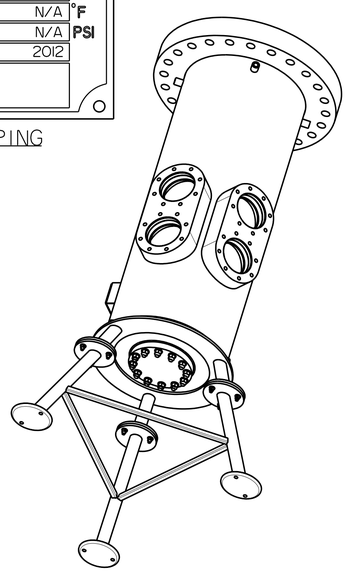

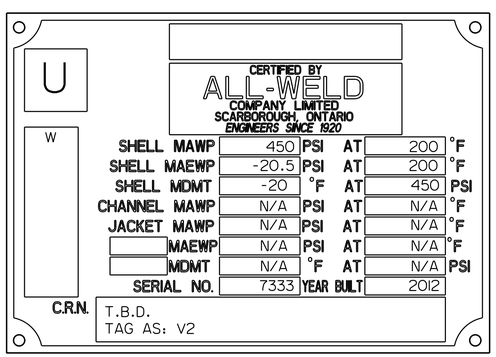

ASME NAMEPLATE STAMPING

ITEM	SIZE	REQ'D	NECK	FLG.	RATE	SERVICE
D	24"	1	3/8	RF SO	300#	-
C	3/4"	4	-	-	3000#	-
B	6"	1	-	-	-	-
A	7"	4	-	-	-	-

NOZZLE SCHEDULE

BILL OF MATERIAL

		ITEM	QTY.	DESCRIPTION	SPEC.
** 6		1/1	1	4-1/2" PLATE, 36" O.D. x 24-1/16" I.D. 24" 300# FLANGE PATTERN, SEE DETAIL ON DRAWING 9833-2	SA-240 316L
** 7		2/1	1	3/8" PLATE x 68" LONG (ROLL TO 24" O.D.)	SA-240 316L
6		3/1	1	4-1/2" PLATE, 23-3/16" O.D. x 6" I.D. MACHINE PER DETAIL ON DRAWING 9833-2	SA-240 316L
** 6		4/1	2	5" PLATE 11" x 22" LONG MACHINE PER DETAIL ON DRAWING 9833-2	SA-240 316L
		5/1	1	1/2" PLATE, 28" O.D. x 19" I.D.	SA-240 304
		6/1	3	3/8" PLATE, 1-5/8" x 2-3/8" LONG SEE DETAIL ON DRAWING 9833-2	SA-240 316L
		7/1	3	1/2" PLATE x 8" O.D. MACHINE PER DETAIL ON DRAWING 9833-2	SA-240 304
		8/1	3	1/2" PLATE x 8" O.D. MACHINE PER DETAIL ON DRAWING 9833-2	SA-240 304
		9/1	3	1/2" PLATE x 8" O.D. MACHINE PER DETAIL ON DRAWING 9833-2	SA-240 304
		10/1	4	3/8" PLATE 1" x 1-5/8" LONG MACHINE PER DETAIL ON DRAWING 9833-2	SA-240 316L
		11/1	3	2" SCH. 40 PIPE x 25" LONG SEE DETAIL ON DRAWING 9833-2	304 S.S.
		12/1	3	2" SCH. 40 PIPE x 8-1/2" LONG SEE DETAIL ON DRAWING 9833-2	304 S.S.
*		13/1	5	3/4" FULL COUPLING 3000# NPT	SA-182 F316L
		14/1	1	#1 NAMEPLATE BRACKET "A" 11 GAUGE 5" x 11"	SA240-304 SA240-316
		15/1	1	AWC NAMEPLATE C/W (4) TAP SCREWS	S.S.
	17	16/1	9	1/2" - 13 UNC HEX. HEAD BOLT x 2" LONG	S.S.
		17/1	9	1/2" - 13 UNC HEX. NUT	S.S.
		18/1	3	1" x 1" x 1/8" THICK SQUARE TUBING x 33" LONG TRIM TO SUIT	304 S.S.
		19/1	1	6" 300# ANSI RF BLIND FLANGE	SA-182 F316L
		20/1	1	6"-150# SPIRAL-WOUND 0.175" THICK GASKET, STYLE CG1	NON ASBESTOS
		21/1	12	3/4" - 10 UNC STUD x 4" LONG	SA-193 B8
		22/1	12	3/4" - 10 UNC HEX. LOCK NUT	SA-194-8
		23/1	12	3/4" DIAMETER WASHER	S.S.

* SEND ONE (1) COUPLING TO CUSTOMER FOR TESTING.
** OFFCUTS TO CUSTOMER FOR TESTING, 4" x 4" OR SMALLER.

GENERAL NOTES:

1. MATERIALS OF CONSTRUCTION: OUTOKUMPO STAINLESS STEEL 316L UNLESS OTHERWISE APPROVED.
2. SURFACE FINISH : INTERNAL SURFACES, WELDS GROUND SMOOTH AND FLUSH.
   EXTERNAL - AS WELDED, CLEANED, DESCALED AND GLASS BEAD BLASTED.
   THE COMPLETE VESSEL WILL BE PASSIVATED AS PER ONE
   21 19 — OF THE TECHNIQUES RECOMMENDED BY ASTM A967-99 OR EQUIV. THEN FERRITE TESTED.
3. PNEUMATIC TESTING SHALL TAKE PLACE AFTER THE HYDROTESTING IS COMPLETED. THE VESSEL WILL BE PRESSURIZED TO 250 PSIG WITH AN INERT GAS AND LEAK CHECKED USING "SNOOP" OR AN EQUIV. PRODUCT. THE PRESSURE OF 250 PSIG SHALL BE HELD FOR A MINIMUM OF (8) HOURS WITH NO MORE THAN A 1% PRESSURE DROP.
4. SEE DRAWING 9833-2 FOR MACHINING AND WELDING DETAILS.
5. THE VESSEL SHALL BE PREPARED FOR SHIPPING BY INSTALLING A BLIND FLANGE OR PLUG OVER EVERY VESSEL PORT AND INSTALLING SHIPPING RESTRAINTS AS NEEDED. THE OUTER VESSEL SHALL BE WRAPPED IN PLASTIC TO KEEP IT CLEAN DURING SHIPPING.

DESIGN DATA:

DESIGNED AND FABRICATED TO ASME SECTION VIII, DIV. 1 UW-12(c) 2010 EDITION. 2011 ADDENDA AND CSA B51-2008.

DESIGN PRESSURE:	450 PSIG
DESIGN TEMPERATURE:	200 °F
MDMT:	-20 °F @ 450 PSIG
MAWP:	450 PSIG @ 200 °F
M.A.E.W.P.	20.5 PSIG @ 200 °F
CORROSION ALLOWANCE:	NONE
SHOP HYDROTEST PRESSURE: AS PER UG-99(b)(NOTE 34)	585 PSIG @ 68 °F
18 — RADIOGRAPHY:	SPOT
IMPACT TESTING:	NOT REQUIRED PER UHA-51(d)(1)(a)
PWHT:	NONE
LOCATION OF INSTALLATION:	LIVELY, ONTARIO
SERIAL NO.:	7333
C.R.N.:	T.B.D.
SERVICE:	WATER
VOLUME:	126 U.S. GALLONS
WEIGHT:	APPROX. 2,200 LBS (EMPTY) APPROX. 3,250 (FULL WITH WATER)

PLOTTED:

ALL-WELD
COMPANY LIMITED
Engineers Since 1920
49 PASSMORE AVE., SCARBOROUGH, ONT. M1V 4T1

Client- FERMILAB

24" O.D. VERTICAL "COUPP" BUBBLE CHAMBER
GENERAL ASSEMBLY
TAG AS: V2

No.	Revision	Date	By
1	REVISED AS PER MEETING WITH CUSTOMER.	MAR. 06 2012	KTC

Drawn KTC | Chk'd | Date 02/07/12
W.O. 98330 | Dwg. 9833-1 | Rev. 1

This drawing is the property of ALL-Weld Company Ltd. and may not be reproduced or disclosed to others without permission in writing.