REV	DESCRIPTION	DRAWN	DATE
		APPROVED	DATE

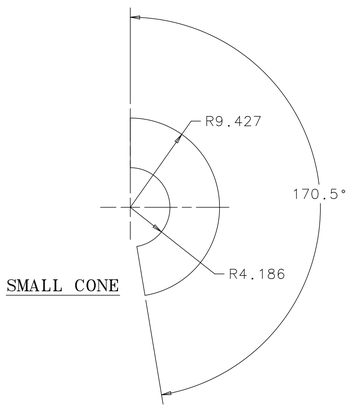

SMALL CONE

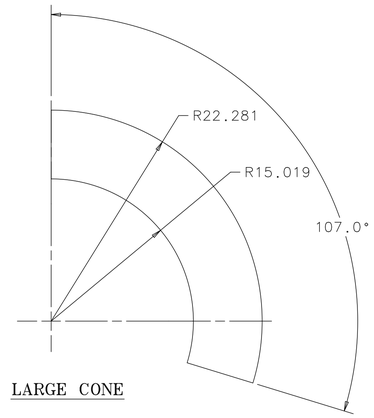

LARGE CONE

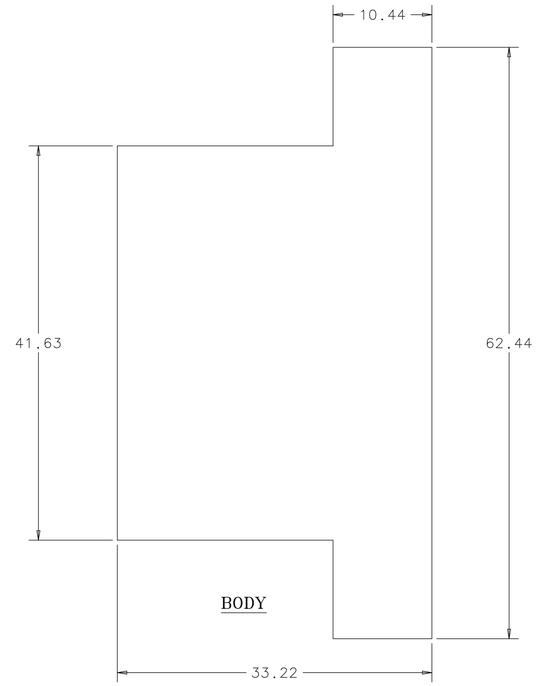

BODY

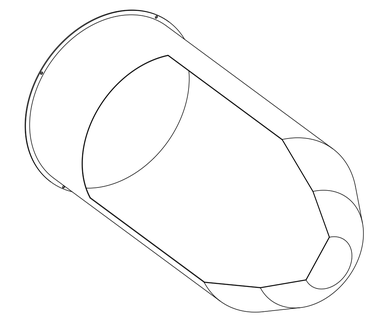

ISOMETRIC VIEW

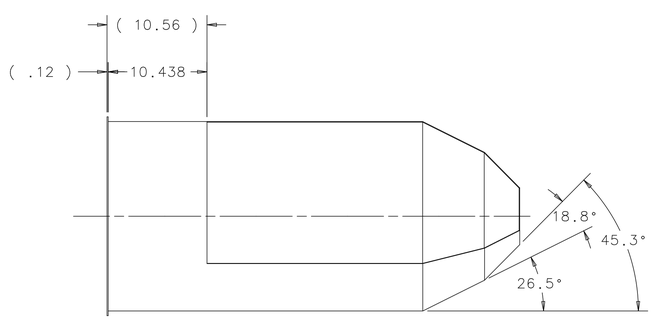

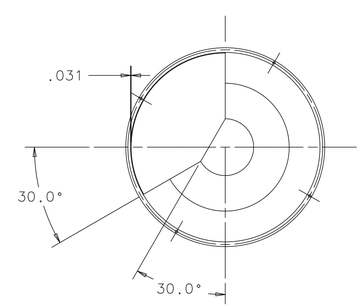

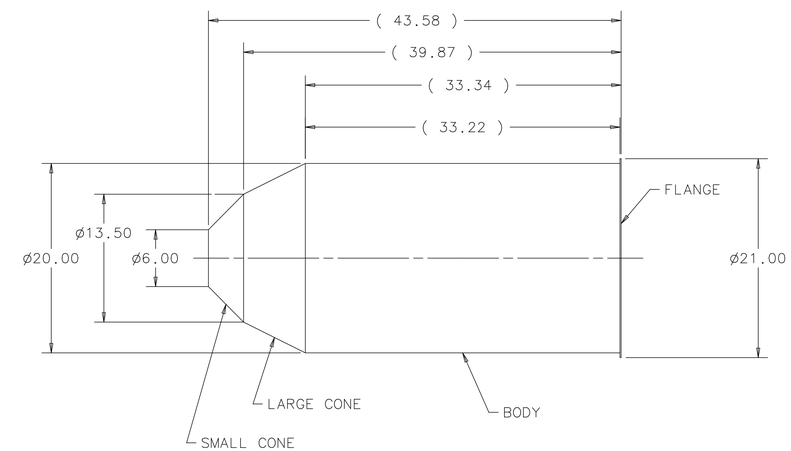

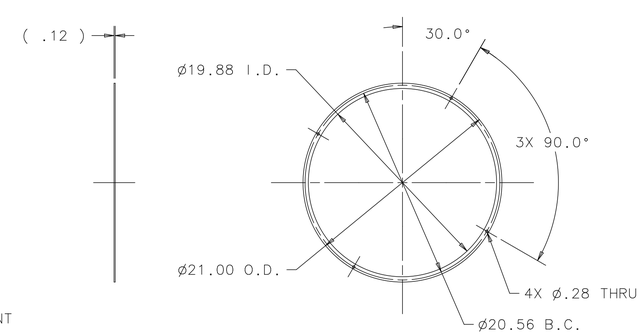

FLANGE

NOTES: TACK WELD WELDMENT

UNLESS OTHERWISE SPECIFIED			ORIGINATOR	H.CEASE	22-SEP-2011
.XX	.XXX	ANGLES	DRAWN	V.MAJDANSKI	22-SEP-2011
± .06	± ---	± 1°	CHECKED		
			APPROVED		

1. BREAK ALL SHARP EDGES .015 MAX.
2. DO NOT SCALE DRAWING.
3. DIMENSIONS BASED UPON ASME Y14.5M-1994
4. MAX. ALL MACH. SURFACES 125
5. DRAWING UNITS: US INCHES

USED ON

MATERIAL
STAINLESS STEEL, 316L; 16 GA.(.031)

FERMI NATIONAL ACCELERATOR LABORATORY
UNITED STATES DEPARTMENT OF ENERGY

MECHANICAL/DETECTORS
COUPP BUBBLE CHAMBER
LIGHT RETRO REFLECTOR

SCALE	DRAWING NUMBER	SHEET	REV
1:8	9213.400-MD-489339	1 OF 1	

CREATED WITH : Ideas12NXSeries GROUP: PPD/MECHANICAL DEPARTMENT

Created: 08:24:42 on 16-11-11 (D-M-Y) By: gsmith State: 1-INITIAL