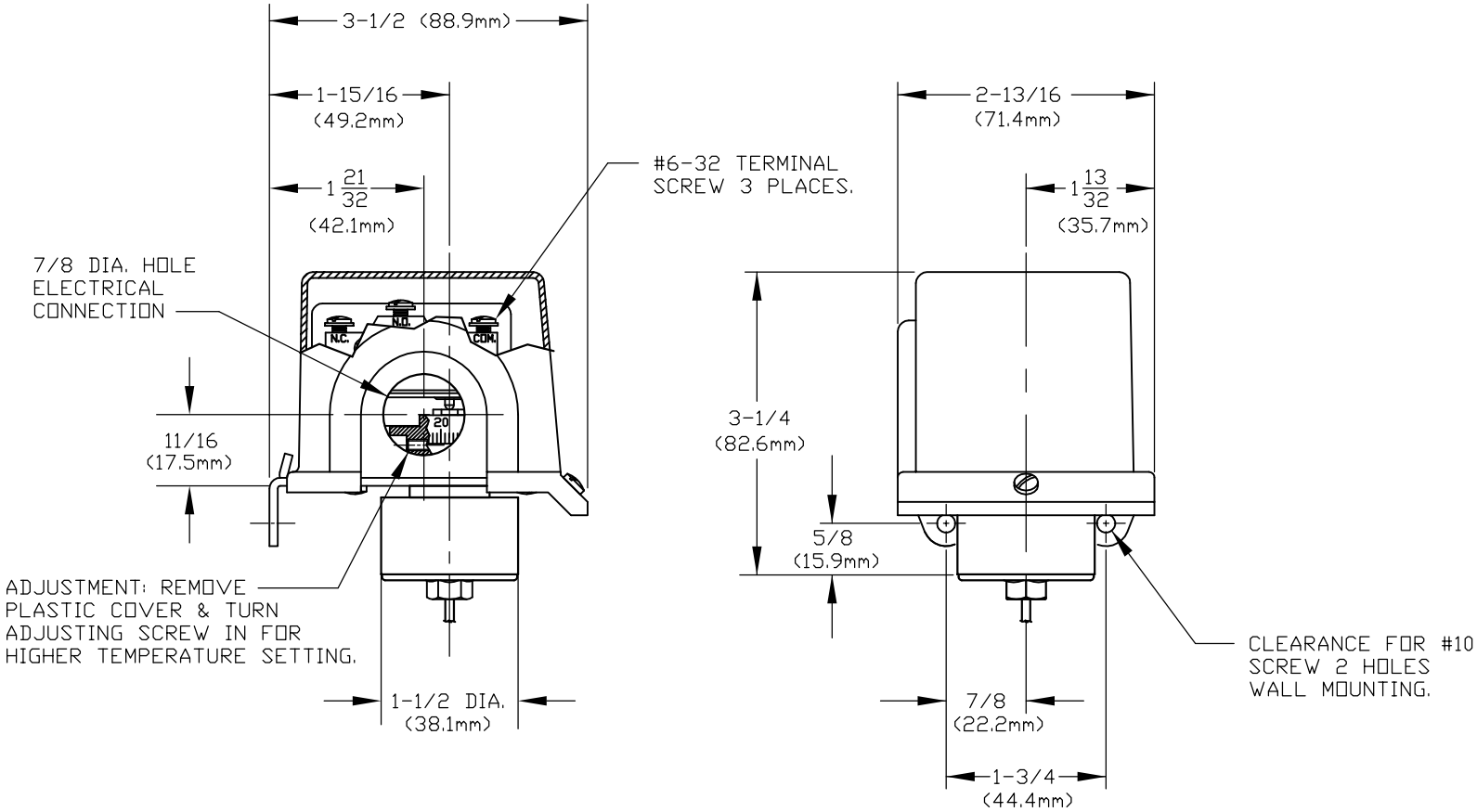

THIS DOCUMENT IS PROPRIETARY PROPERTY OF UNITED ELECTRIC CONTROLS. UNAUTHORIZED USE IS STRICTLY PROHIBITED.

SYM	DESCRIPTION	DATE	DWN	APPD
W	REDRAWN. REVISED VIEW OF THERMAL ASSY. ECN#E3436	1-6-10	SR	RAM

REVISIONS

ORIGINAL DATE 2-16-71
DRWN PETER WEILER
CHKD A.J.MUSTO JR.
APPD A.J.MUSTO JR.

UNLESS OTHERWISE SPECIFIED DIMENSIONS ARE IN INCHES
TOLERANCES ON FRACTIONS ±1/64
2 PLACE DEC ±0.010 3 PLACE DEC ±0.005 ANGLES ±1/2°
DO NOT SCALE THIS DRAWING

TITLE
E54
D20 THRU D23
(TEMPERATURE)

SCALE HALF

DF001D

UNITED ELECTRIC CONTROLS COMPANY
WATERTOWN * MASSACHUSETTS

DWG NO
A-10836