DWG. SIZE	DWG. NO.
D	031–2960

REVISIONS

SYM.	E.C.N.	DATE	APVD.
A	25121	5/12/03	
	REVISED DIAL PLATE		

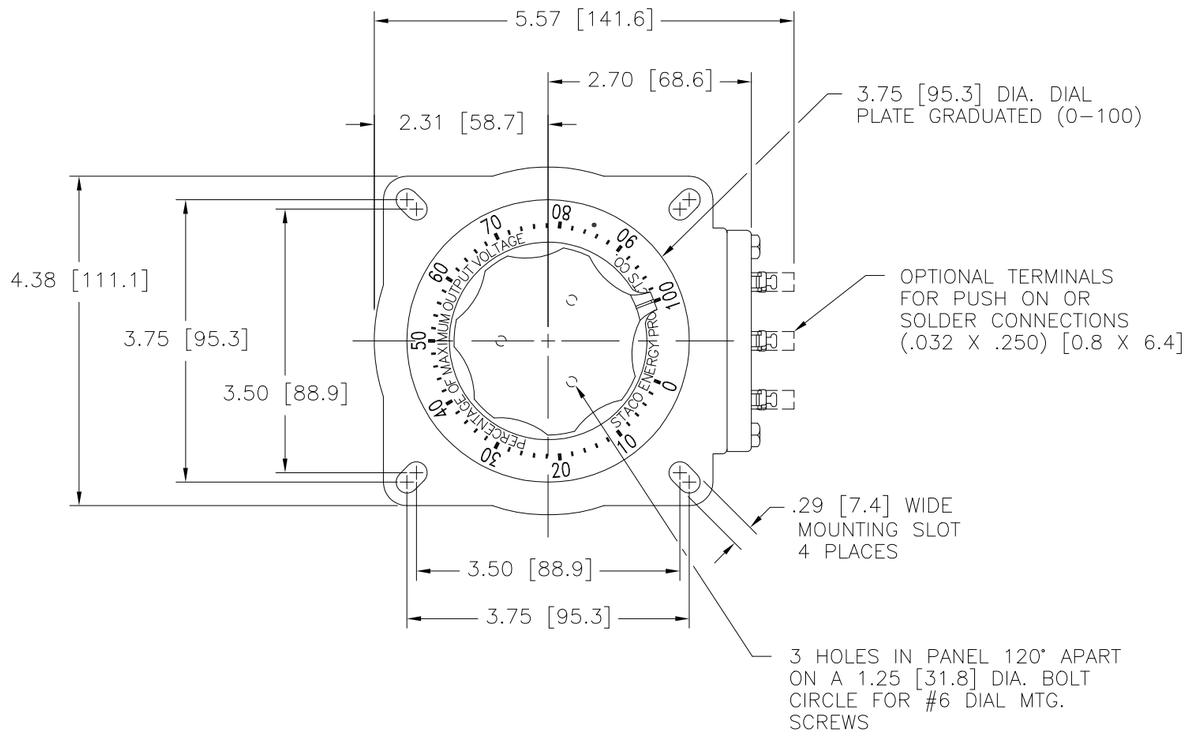

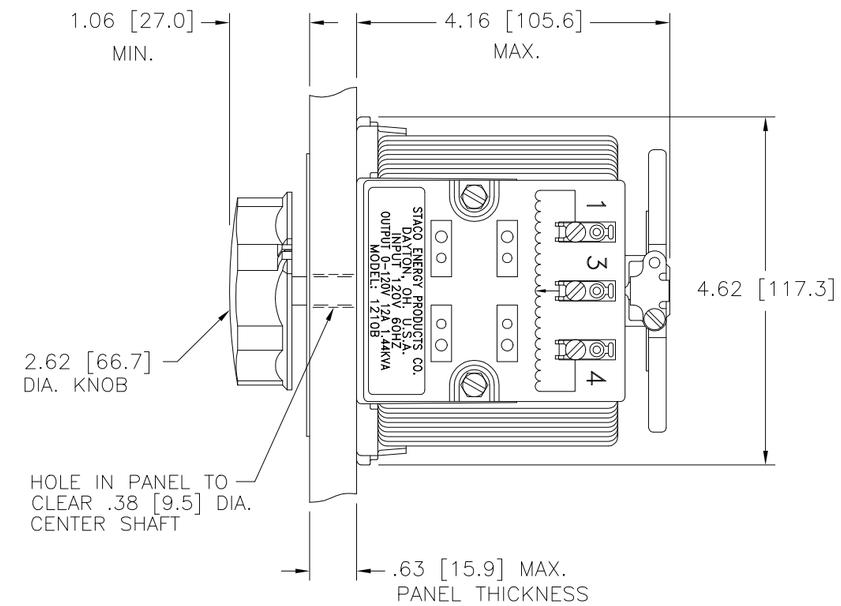

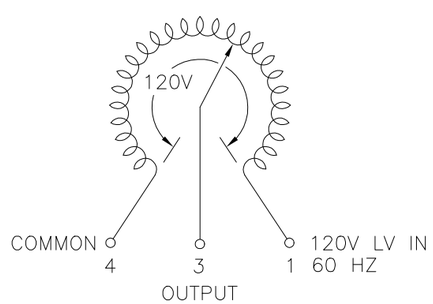

SCHEMATIC
VIEW FROM BASE END
FUSE RECOMMENDED BUT NOT SUPPLIED

SPECIFICATIONS

WIRING	INPUT VOLTS	INPUT HERTZ	OUTPUT VOLTS	CONSTANT CURRENT LOAD MAX. AMPS	CONSTANT CURRENT LOAD MAX. KVA	CONSTANT IMPEDANCE LOAD MAX. AMPS	CONSTANT IMPEDANCE LOAD MAX. KVA	SHAFT ROTATION TO INCREASE VOLTAGE	TERMINAL CONNECTIONS FOR INCREASING VOLTAGE AS VIEWED FROM BASE END: INPUT	JUMPER	OUTPUT
SINGLE PHASE	120	60	0–120	12	1.44	15	1.80	CW	1–4	———	4–3
								CCW	1–4	———	1–3

UNLESS OTHERWISE SPECIFIED, TOLERANCE IS ±
DECIMALS .XX .03 .XXX .005 HOLES .002 ANGLES 1° DRAFT 1–1/2°

UNITS IN [mm]

MATERIAL :

ALL DIMENSIONS APPLY AFTER PLATING

TITLE: SPEC. CONTROL DRAWING VARIABLE TRANSFORMER MODEL: 1210B

STACO ENERGY PRODUCTS CO.
A Components Corporation of America Company
301 Gaddis Boulevard Dayton, Ohio 45403 USA

The information and design disclosed herein was originated by and is the property of STACO ENERGY PRODUCTS CO., which reserves all patent, proprietary, design, manufacturing, reproduction, use and sale rights thereto, and to any article disclosed therein except to the extent rights are expressly granted to others. The foregoing does not apply to vendor proprietary parts.

DRAWN BY	DATE	FIRST USED ON	DO NOT SCALE DWG.
S.A. SMITH	9/24/97		
CHECKER	DATE	WEIGHT APPROX. 10 LBS	CAGE CODE 83008
ENGINEER	DATE	SCALE 1=1	SHEET 1 OF 1

DWG. SIZE	DWG. NO.
D	031–2960