FERMILAB
ENGINEERING NOTE

SECTION	PROJECT	SERIAL-CATEGORY	PAGE

SUBJECT: Revised Hydraulic Controls Wiring

NAME: M CRISLER

DATE: 23 June 2010
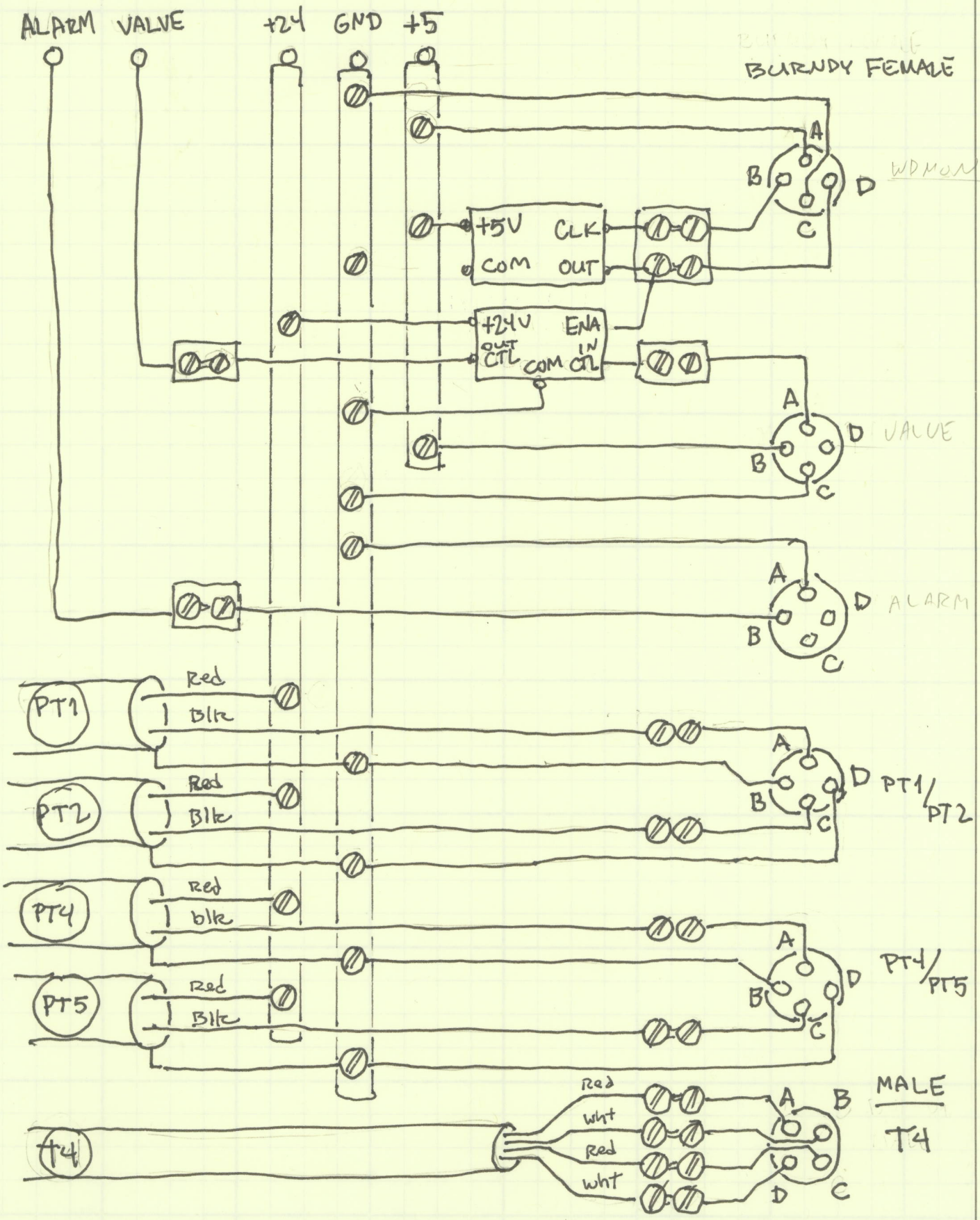
REVISION DATE: