ITEM	QTY	DESCRIPTION	MAT'L
1	1	3" PL x 20.75" OD x 5.75" ID	SA-240-304
2	1	1.5" PL x 13" OD x 2.75" ID	SA-240-304

NOTES:

1. SEE DRAWINGS 2 AND 3 FOR WELDING.

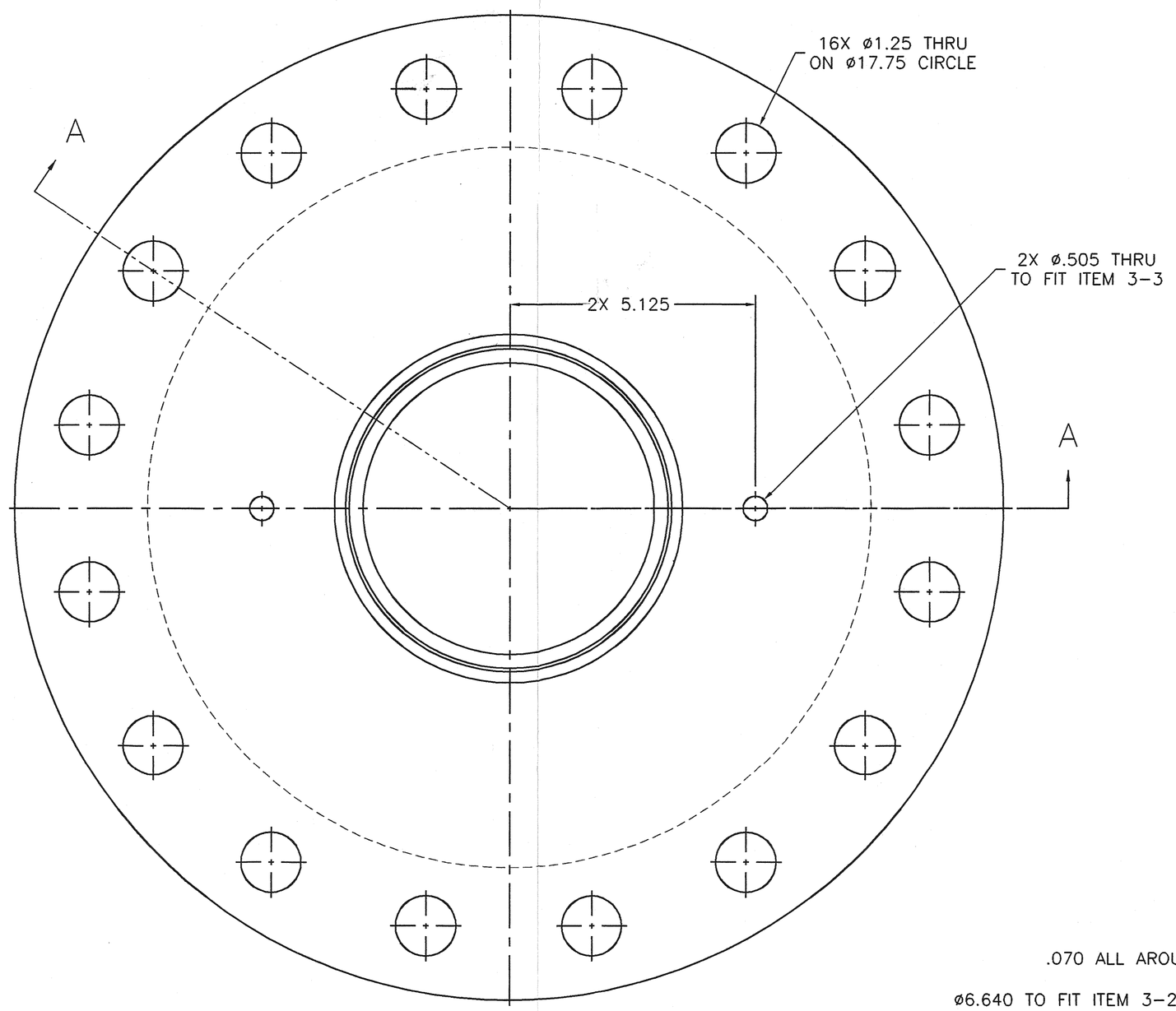

ITEM 1

QTY 1

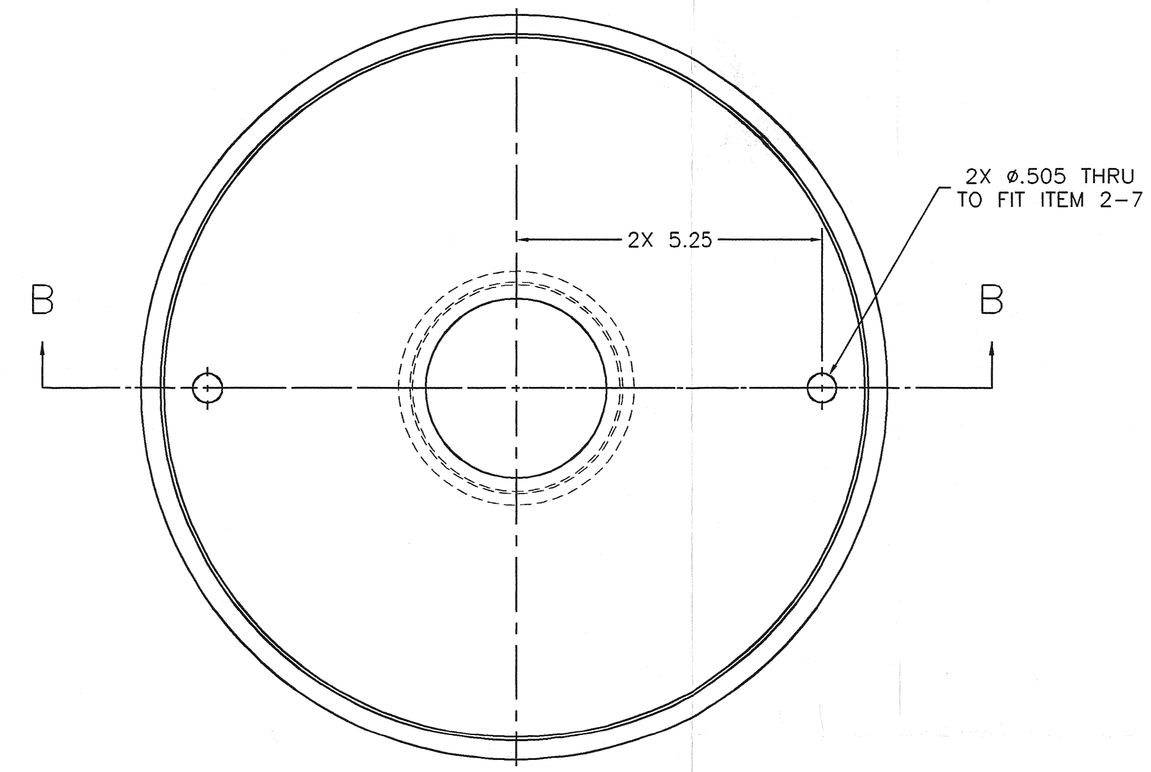

ITEM 2

QTY 1

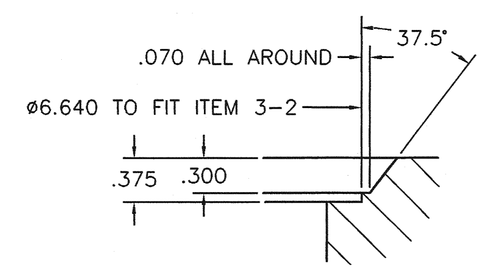

DETAIL A
SCALE 1:1

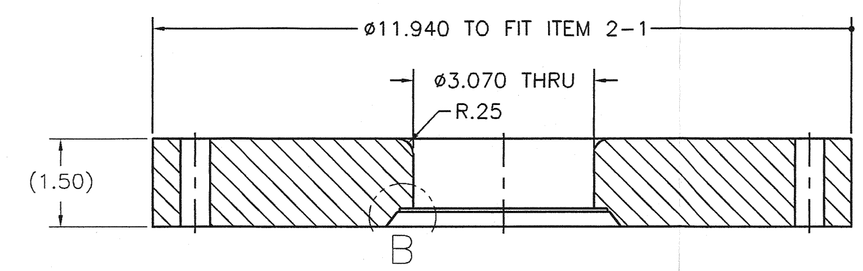

SECTION B-B

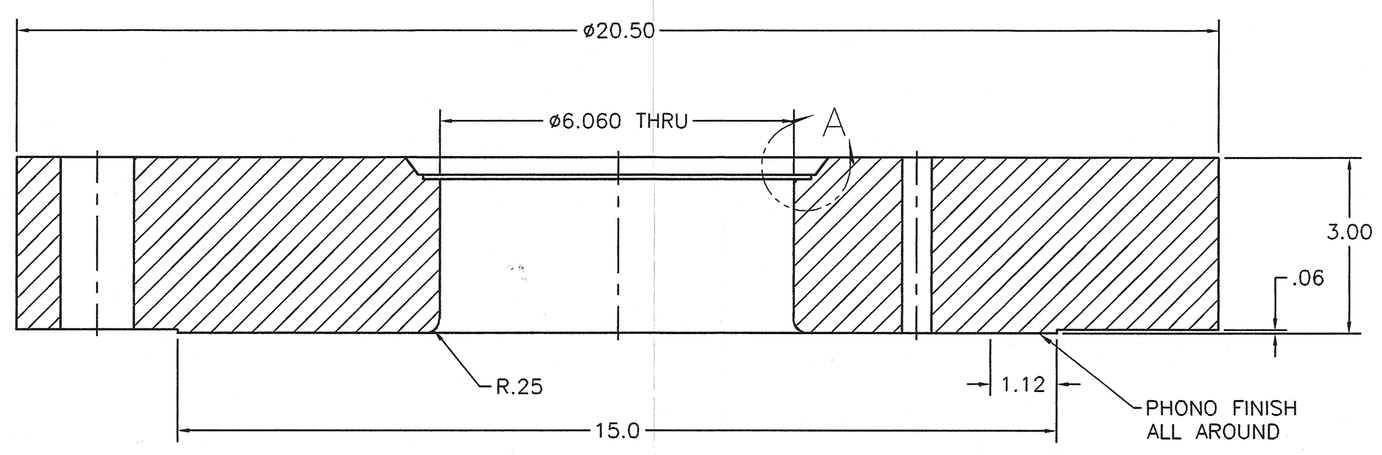

SECTION A-A

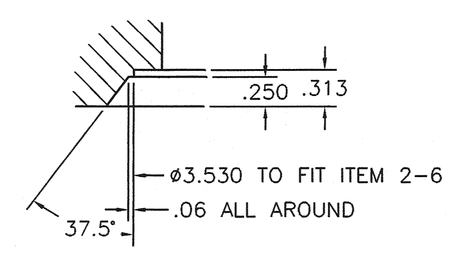

DETAIL B
SCALE 1:1

REV.	DESCRIPTION	BY	CHK'D

UNLESS NOTED OTHERWISE DIMENSIONS IN INCHES

TOLERANCES

FRACT. ± 1/16
.X ± .03
.XX ± .01
.XXX ± .005
ANGLES ± 1Deg

MTM
Meyer Tool & Mfg., Inc.

BY: CME 1/9/04 | CHK'D:

600 PSI BUBBLE CHAMBER OUTER VESSEL
TOP AND BOTTOM PLATES

THIS DRAWING AND DESIGN IS THE PROPERTY OF MEYER TOOL AND MFG. CO. UNAUTHORIZED USE OR REPRODUCTION IS STRICTLY PROHIBITED.

SCALE	CUSTOMER	JOB NO.	DWG.	SIZE: D
HALF	U OF CHICAGO	01013	04	REV. 0