ITEM	QTY	DESCRIPTION	MAT'L
1	1	12" SCH 40S PIPE (.375 WALL) x 24" LG	SA-312 TP304
2	1	12" CL300 RAISED FACE SLIP ON FLANGE	SA-182 F304
3	4	6" CL300 RFSO FLANGES- HUBS REMOVED	SA-182 F304
4	1	3" CL300 RFSO FLANGE- HUB REMOVED	SA-182 F304
5	4	6" SCH 40 PIPE (.280" WALL) X 3 1/2"LG	SA-312 TP304
6	1	3" SCH 40 PIPE (.216" WALL) X 2 5/8" LG	SA-312 TP304
7	2	1/2"OD TUBE x .083" WALL x 4" LG	SA-213 TP304
8	4	1/2" TUBE SOCKET WELD UNION- SWAGELOK SS-810-6-8W	316 SS
9	4	1/2" NUT/FERRULE SETS- SWAGELOK SS-810-NFSET	316 SS
10	4	2" x 2" x 1/4" ANGLE x 13.75"LG	304 SS
11	4	1/2" PLATE x 4" x 4"	SA-240 TP304

NOTES:

1. REMOVE HUBS FROM BACK OF 5 FLANGES BEFORE WELDING AS SHOWN.
2. ALL WELDING TO BE PERFORMED BY CODE-QUALIFLED WELDERS USING WPS GTAW-SS FOR ROOT PASSES AND WHERE APPLICABLE, WPS GMAW-SS FOR COVER PASSES.
3. PASSIVATE AFTER WELDING.

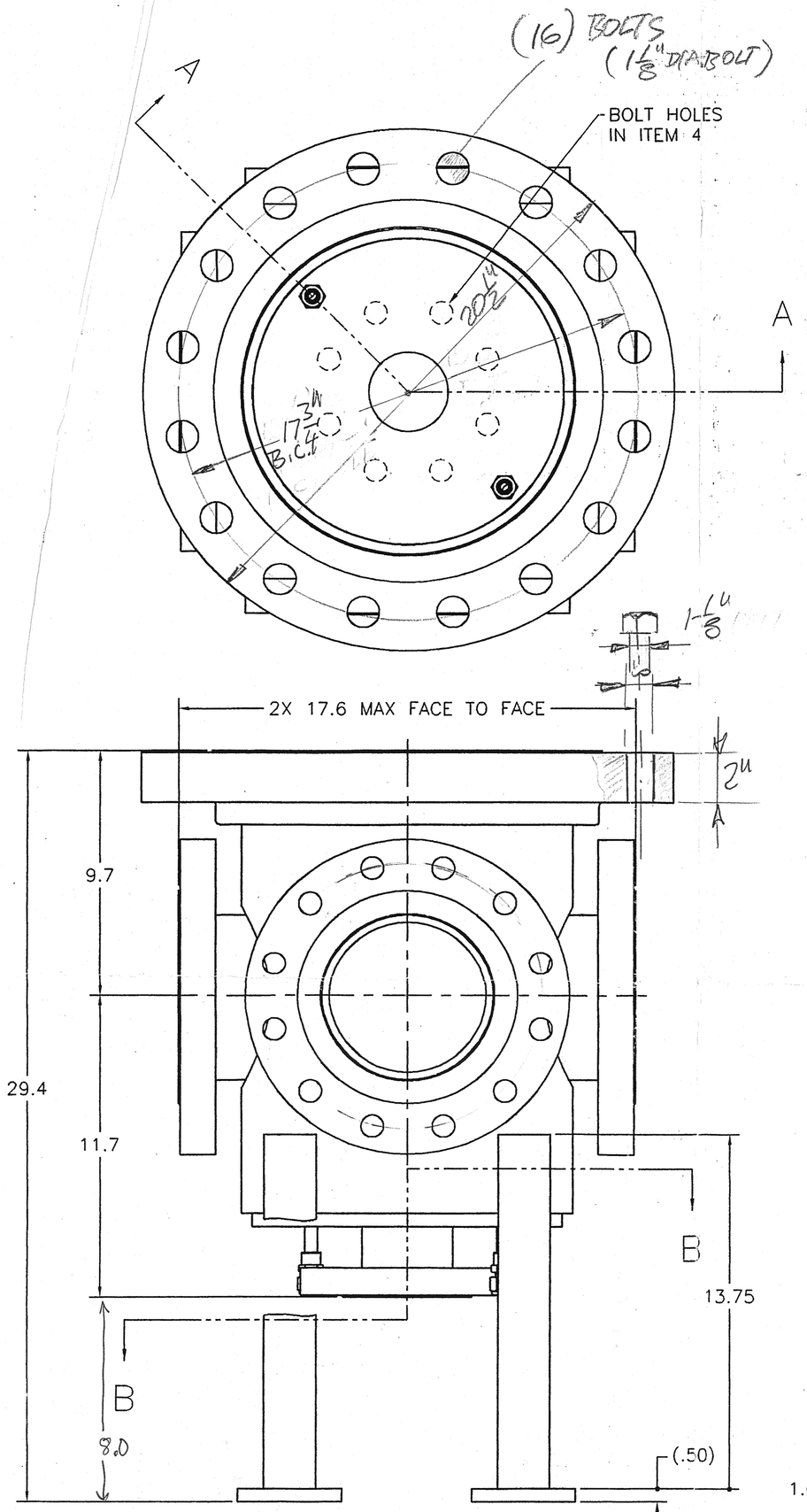

ASSEMBLY A

1 RQD

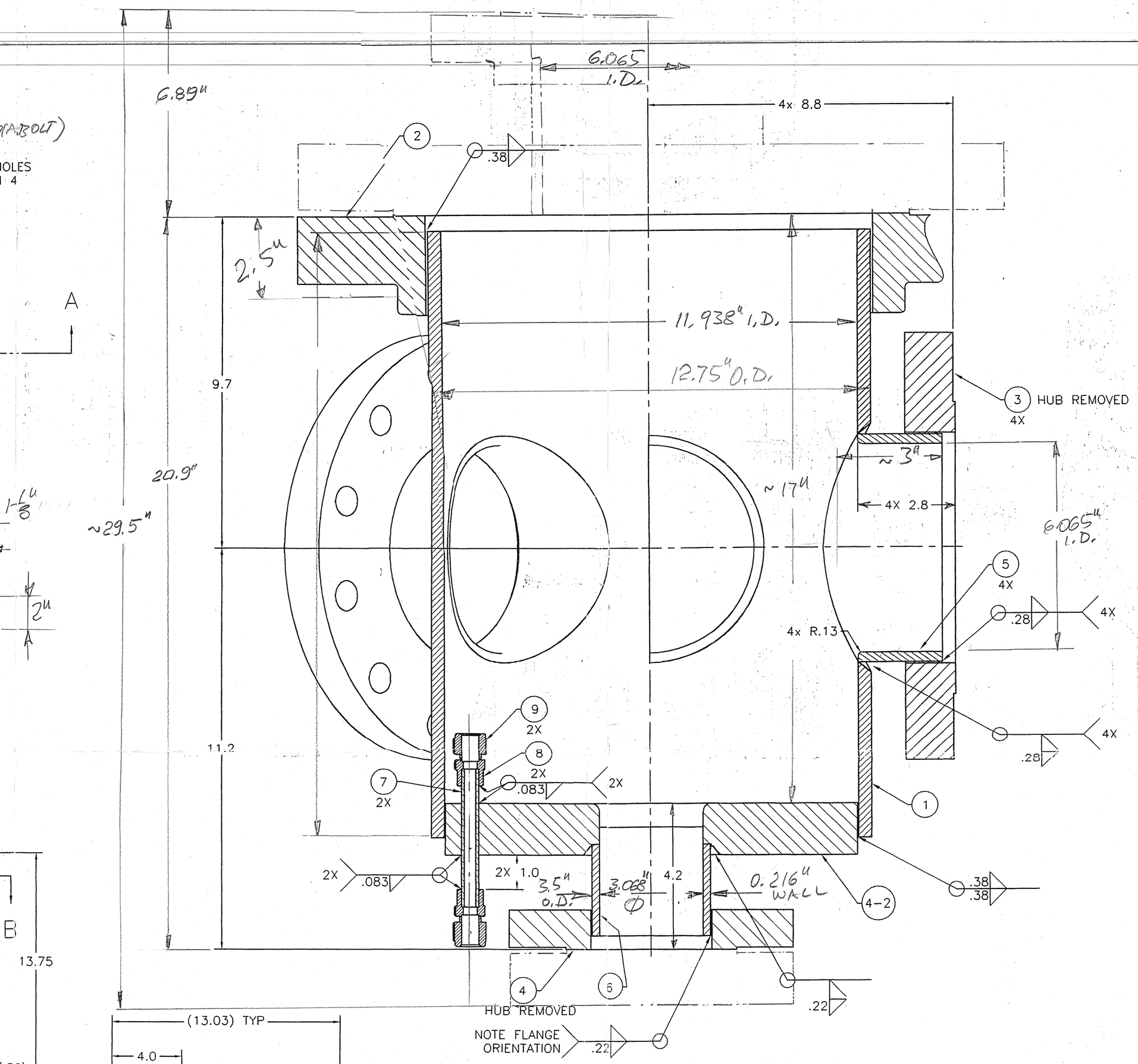

SECTION A-A

HALF-SCALE

LEGS NOT SHOWN

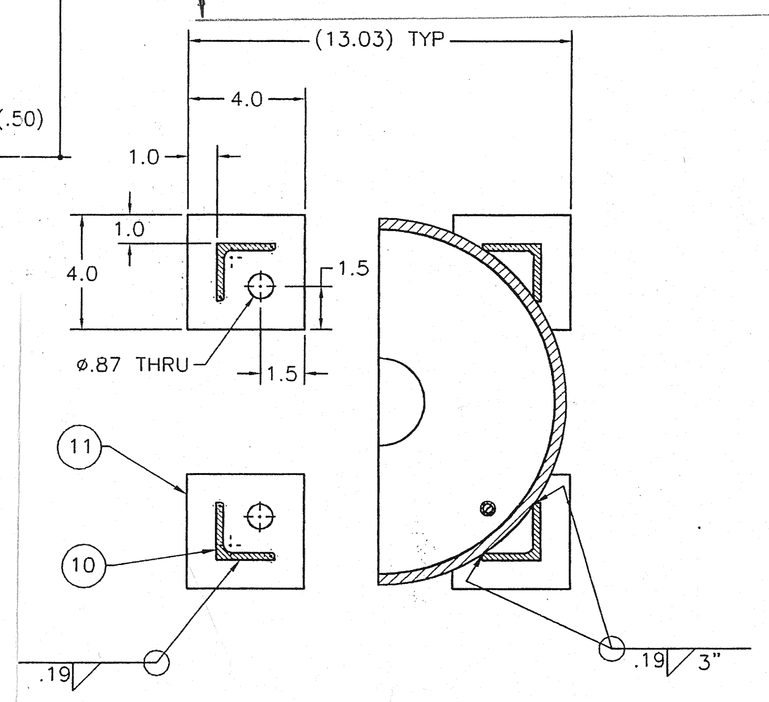

SECTION B-B

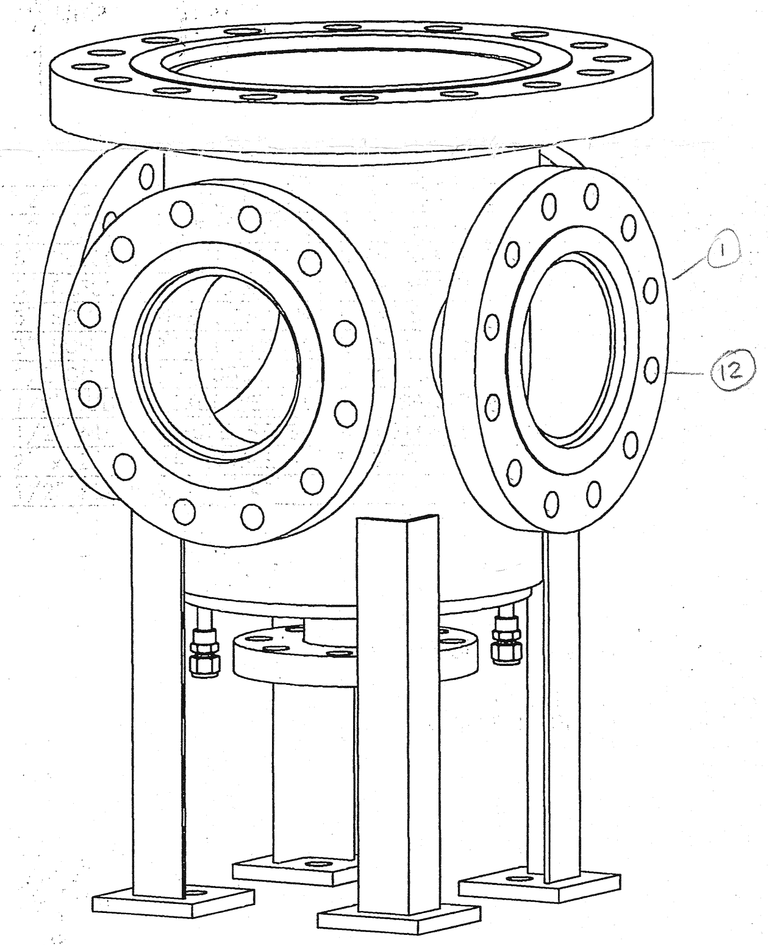

REV.	DESCRIPTION	BY	CHK'D

UNLESS NOTED OTHERWISE DIMENSIONS IN INCHES

TOLERANCES

FRACT. ± 1/16
.X ± .03
.XX ± .01
.XXX ± .005
ANGLES ± 1Deg

MTM

Meyer Tool & Mfg., Inc.

BY: CME 1/9/04 | CHK'D: RDE 1/12/04

600 PSI BUBBLE CHAMBER OUTER VESSEL

VESSEL WELDMENT

THIS DRAWING AND DESIGN IS THE PROPERTY OF MEYER TOOL AND MFG. CO. UNAUTHORIZED USE OR REPRODUCTION IS STRICTLY PROHIBITED.

SCALE	CUSTOMER	JOB NO.	DWG.	SIZE: D
1:4	U OF CHICAGO	01013	02	REV. 0

1:2