ITEM	QTY	DESCRIPTION	MAT'L
1	1	6" CL300 RAISED FACE SLIP ON FLANGE	SA-182 F304
2	1	6" SCH 40 PIPE (.280" WALL) x 3.9" LG	SA-312 TP304
3	2	1/2"OD TUBE x .083" WALL x 5.25" LG- MITER ONE END	SA-213 TP304
4	2	1/2"OD TUBE x .083" WALL x 2.0" LG- MITER ONE END	SA-213 TP304
5	4	1/2" TUBE SOCKET WELD UNION- SWAGELOK SS-810-6-8W	316 SS
6	4	1/2" NUT/FERRULE SETS- SWAGELOK SS-810-NFSET	316 SS

NOTES:

1. ALL WELDING TO BE PERFORMED BY CODE-QUALIFIED WELDERS USING WPS GTAW-SS FOR ROOT PASSES AND WHERE APPLICABLE. WPS GMAW-SS FOR COVER PASSES.

2. PASSIVATE AFTER WELDING.

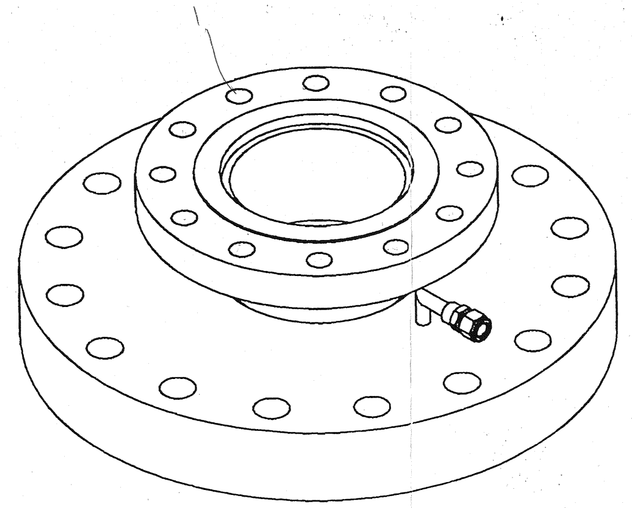

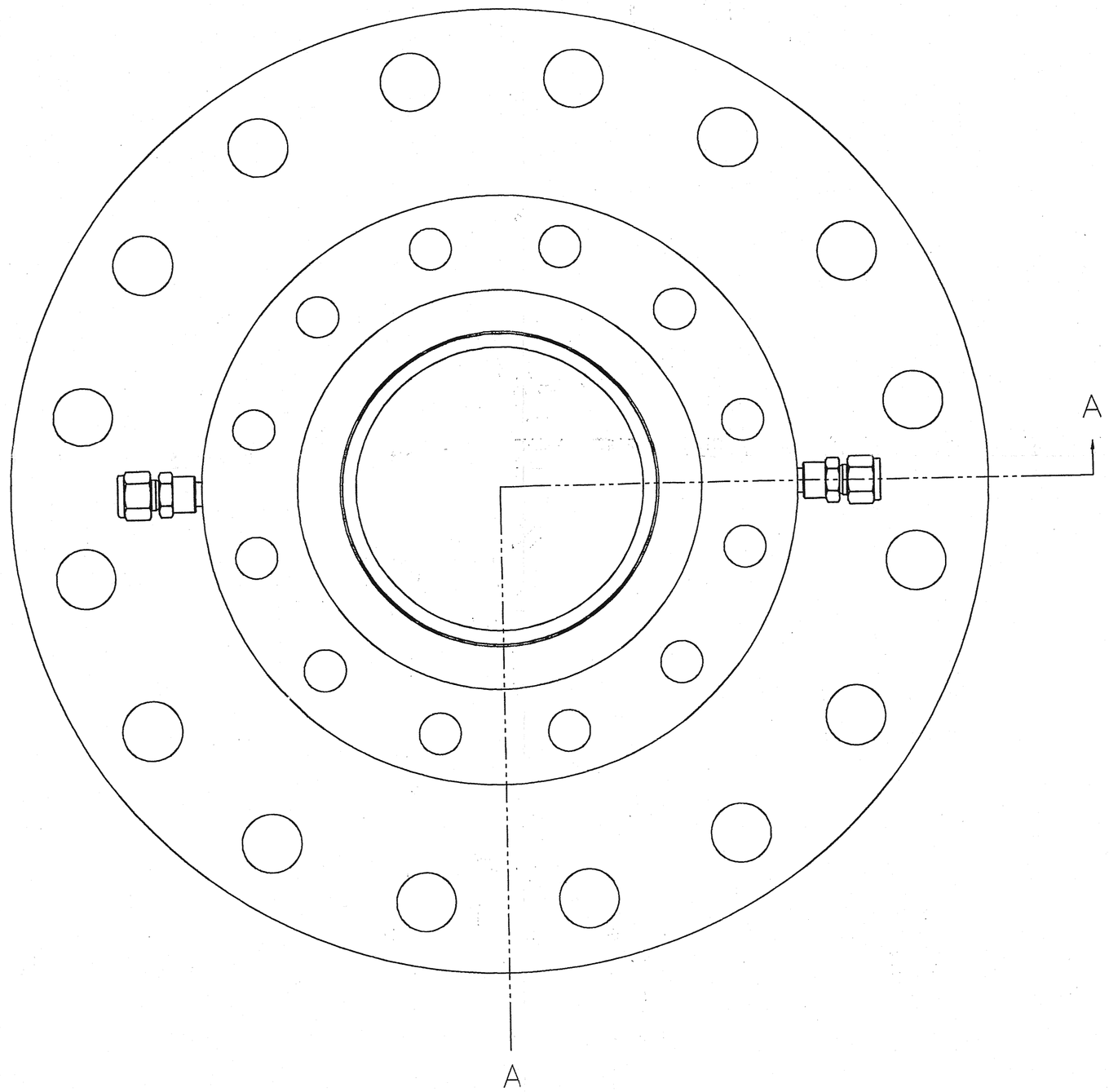

ASSEMBLY A

1 RQD

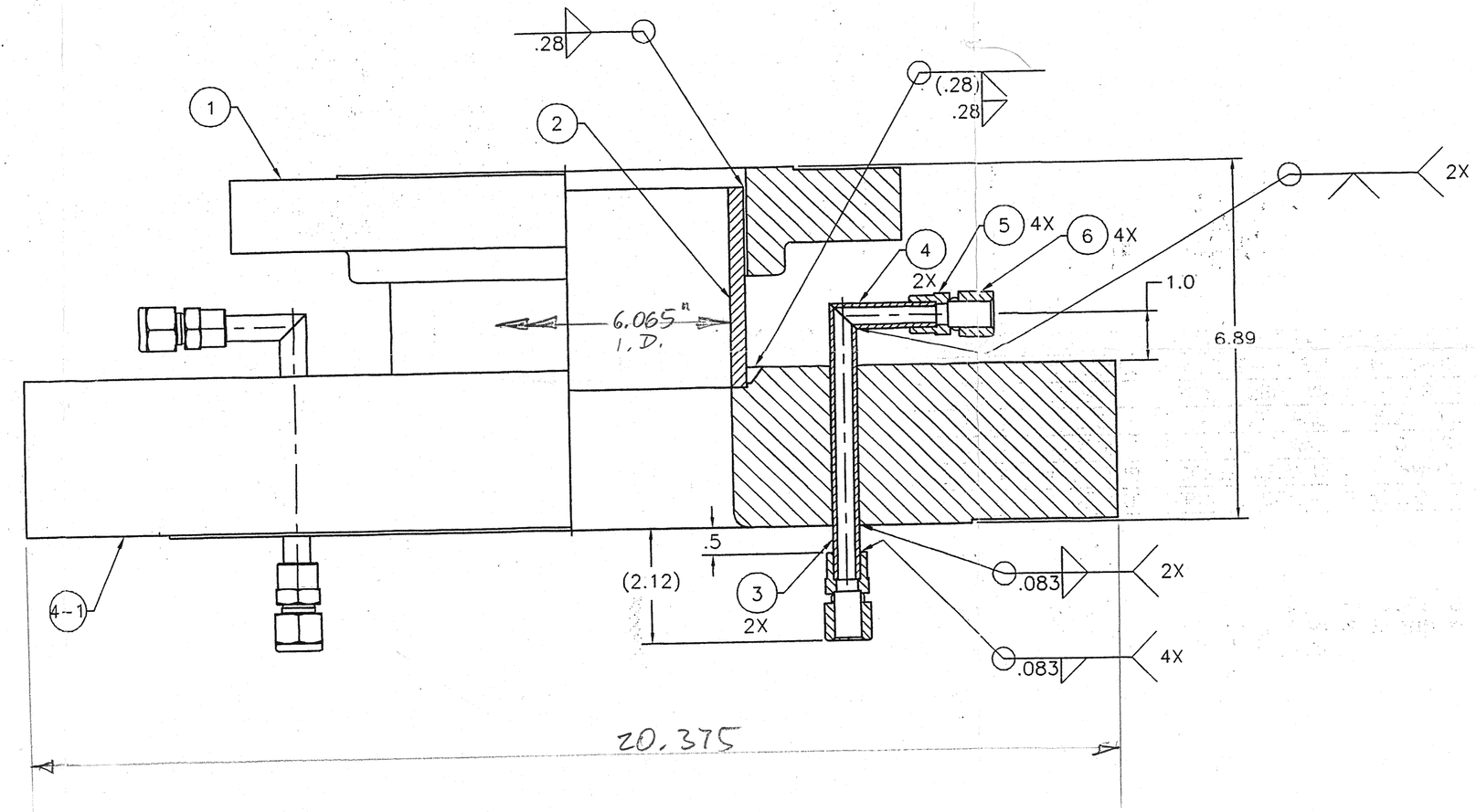

SECTION A-A

REV.	DESCRIPTION	BY	CHK'D

UNLESS NOTED OTHERWISE DIMENSIONS IN INCHES

TOLERANCES
FRACT. ± 1/16
.X ± .03
.XX ± .01
.XXX ± .005
ANGLES ± 1Deg

MTM
Meyer Tool & Mfg., Inc.

BY: CME 1/9/04 CHK'D: RDC 1/12/04

600 PSI BUBBLE CHAMBER OUTER VESSEL
TOP COVER WELDMENT

THIS DRAWING AND DESIGN IS THE PROPERTY OF MEYER TOOL AND MFG. CO. UNAUTHORIZED USE OR REPRODUCTION IS STRICTLY PROHIBITED.

SCALE	CUSTOMER	JOB NO.	DWG.	SIZE: D
HALF	U OF CHICAGO	01013	03	REV. 0