REV	DESCRIPTION	DRAWN	DATE
		APPROVED	DATE

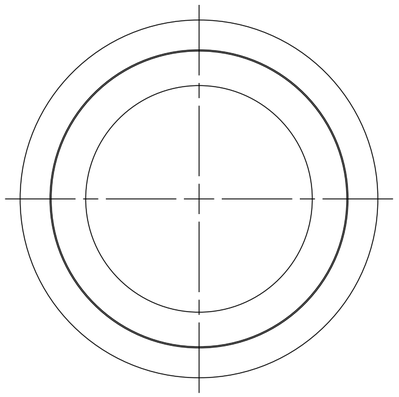

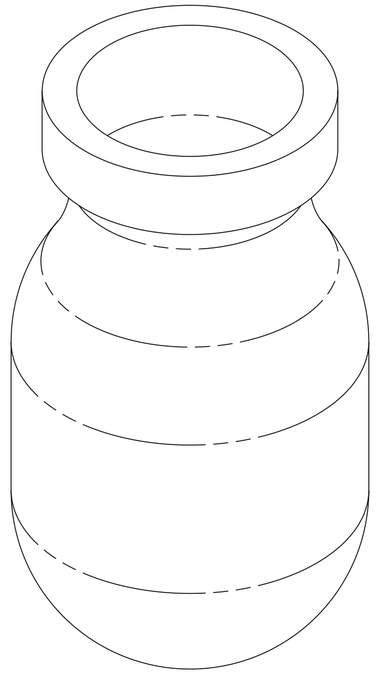

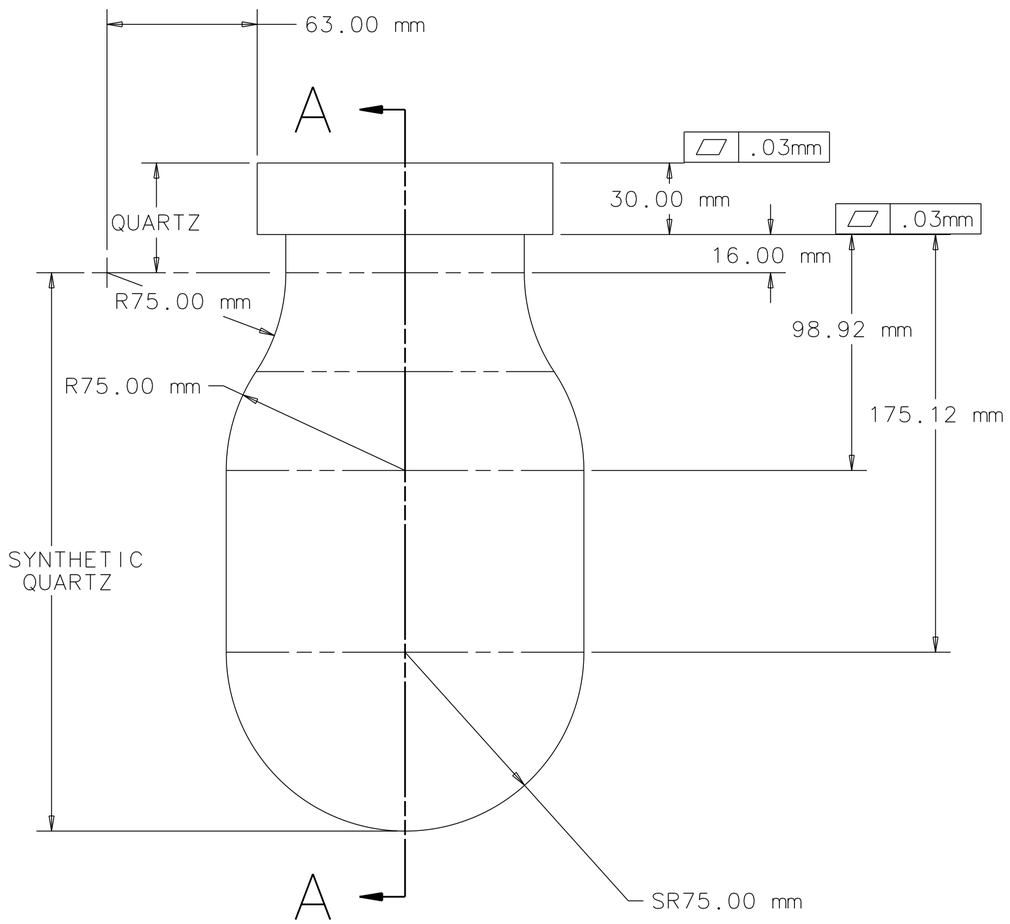

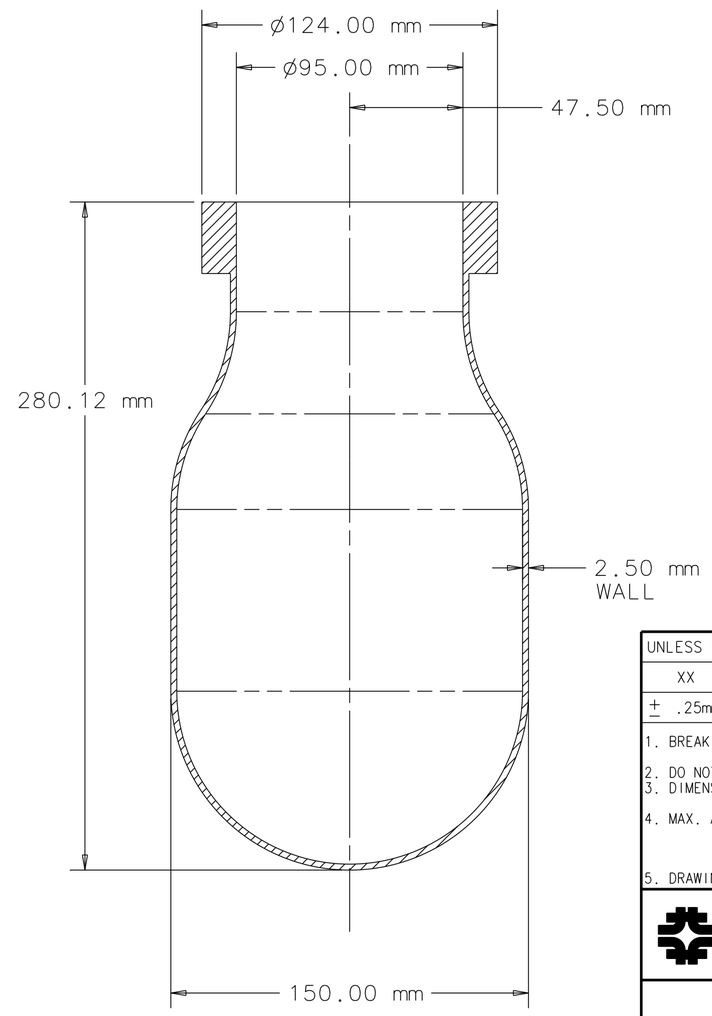

SECTION A-A

UNLESS OTHERWISE SPECIFIED			ORIGINATOR	R.SCHMITT	06-FEB-2008
XX	XXX	ANGLES	DRAWN	S.KINDELBERGER	06-FEB-2008
± .25mm	± ---	± ---	CHECKED		
1. BREAK ALL SHARP EDGES MAX.			APPROVED		
2. DO NOT SCALE DRAWING. 3. DIMENSIONS BASED UPON			USED ON		
4. MAX. ALL MACH. SURFACES ✓			MATERIAL	SYNTHETIC QUARTZ	
5. DRAWING UNITS: METRIC					

FERMI NATIONAL ACCELERATOR LABORATORY
UNITED STATES DEPARTMENT OF ENERGY

MECHANICAL/DETECTORS
COUPP BUBBLE CHAMBER
QUARTZ BULB FLASK 3-LITER

SCALE	DRAWING NUMBER	SHEET	REV
1:2	9213.400-MC-444947	1 OF 1	

CREATED WITH : Ideas12NXSeries | GROUP: PPD/MECHANICAL DEPARTMENT