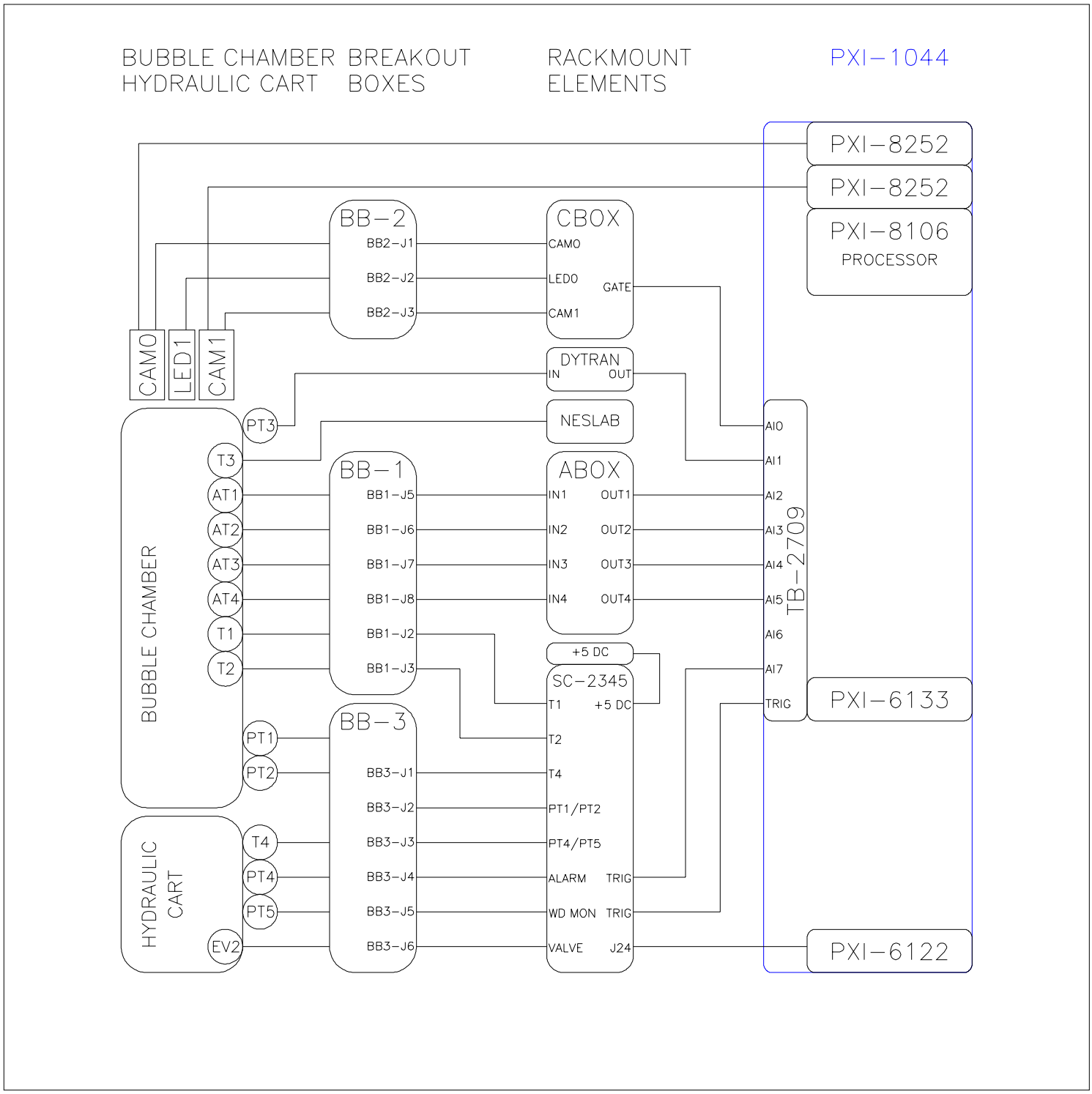
BUBBLE CHAMBER HYDRAULIC CART
BREAKOUT BOXES
RACKMOUNT ELEMENTS
PXI-1044
PXI-8252
PXI-8252
PXI-8106
PROCESSOR
BB-2
BB2-J1
BB2-J2
BB2-J3
CBOX
CAM0
LED0
GATE
CAM1
CAM0
LED1
CAM1
DYTRAN
IN
OUT
NESLAB
PT3
BUBBLE CHAMBER
T3
AT1
AT2
AT3
AT4
T1
T2
BB-1
BB1-J5
BB1-J6
BB1-J7
BB1-J8
BB1-J2
BB1-J3
ABOX
IN1
IN2
IN3
IN4
OUT1
OUT2
OUT3
OUT4
TB-2709
AI0
AI1
AI2
AI3
AI4
AI5
AI6
AI7
TRIG
+5 DC
SC-2345
T1
+5 DC
T2
T4
PT1/PT2
PT4/PT5
ALARM
TRIG
WD MON
TRIG
VALVE
J24
PXI-6133
PT1
PT2
BB-3
BB3-J1
BB3-J2
BB3-J3
BB3-J4
BB3-J5
BB3-J6
HYDRAULIC CART
T4
PT4
PT5
EV2
PXI-6122