FERMILAB
ENGINEERING NOTE

SECTION	PROJECT	SERIAL-CATEGORY	PAGE

SUBJECT: SC-2345 TEMPERATURE & PRESSURE

NAME: M. CRISLER

DATE: 22 JUNE 2010
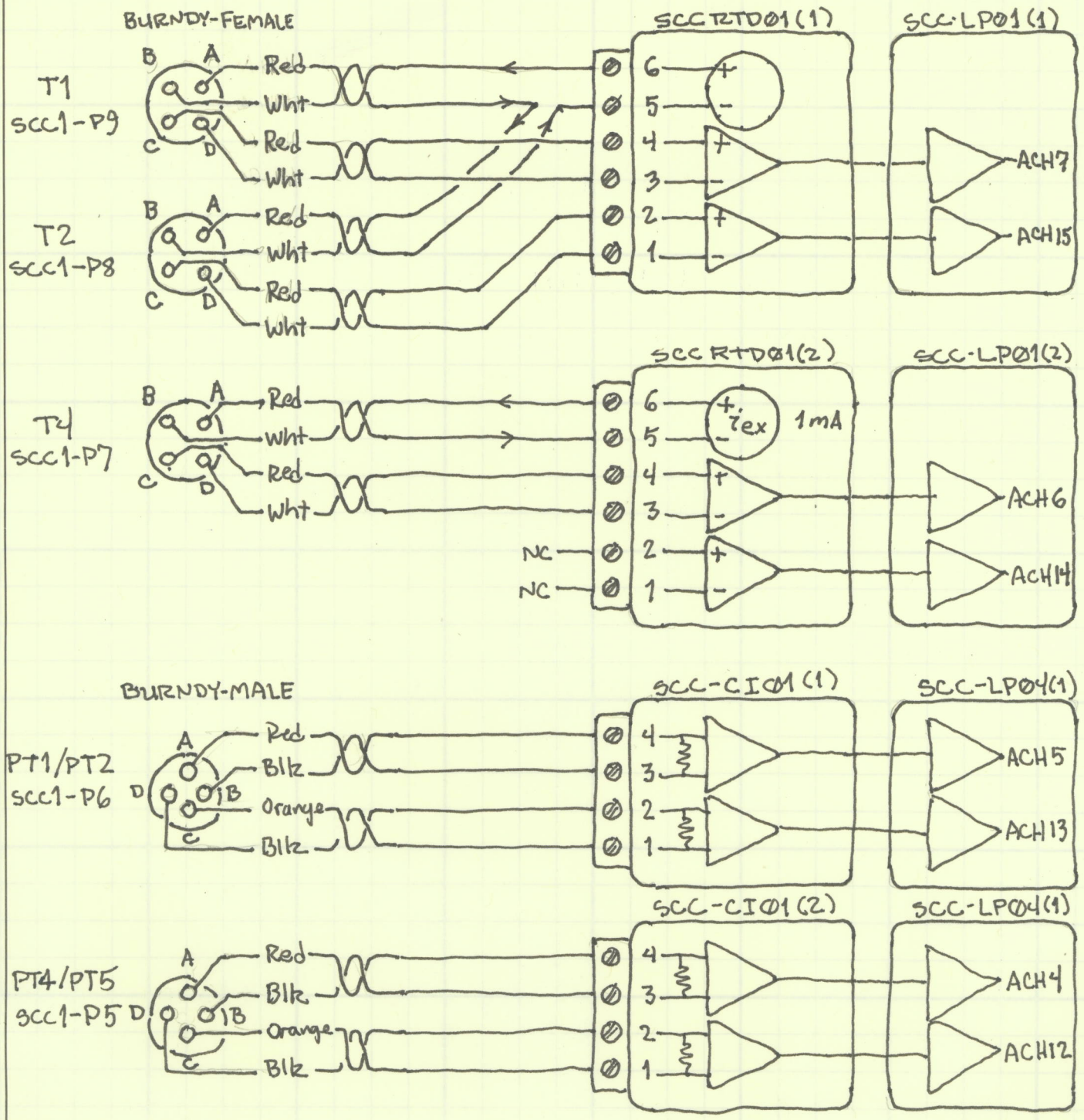
REVISION DATE: