FERMILAB
ENGINEERING NOTE

SECTION	PROJECT	SERIAL-CATEGORY	PAGE

SUBJECT: SC-2345 TEMPERATURE & PRESSURE

NAME: M. CRISLER

DATE: 07MAY2010

REVISION DATE:

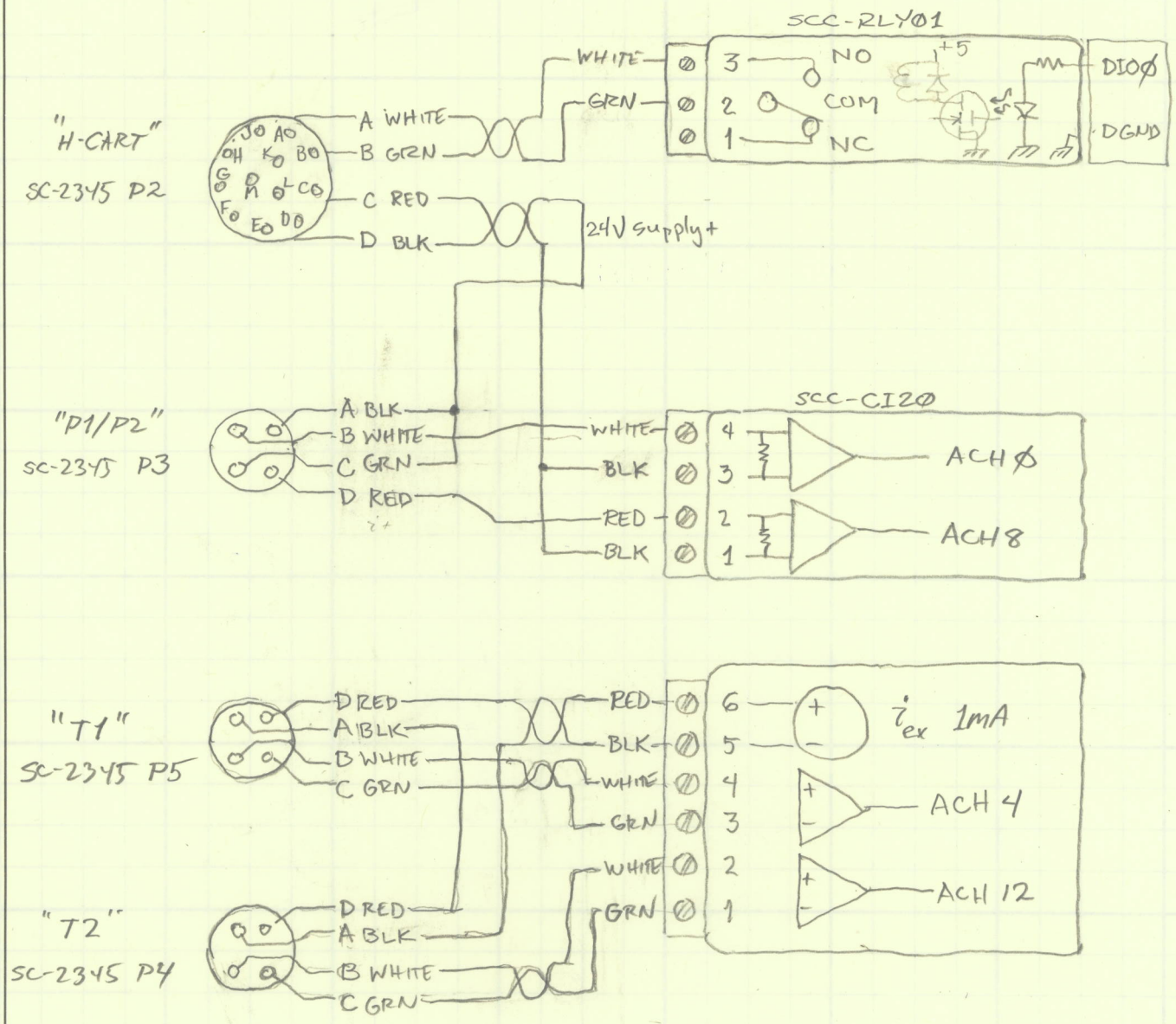

BURNDY TRIM TRIO BANTAM GOB 14-92 JNE, 12 SOCKET CONTACTS