Signal Conditioning

SC-2345/2350 Carrier User Manual

July 2007
371064F-01

NATIONAL INSTRUMENTS™

Worldwide Technical Support and Product Information

ni.com

National Instruments Corporate Headquarters

11500 North Mopac Expressway Austin, Texas 78759-3504 USA Tel: 512 683 0100

Worldwide Offices

Australia 1800 300 800, Austria 43 662 457990-0, Belgium 32 (0) 2 757 0020, Brazil 55 11 3262 3599, Canada 800 433 3488, China 86 21 5050 9800, Czech Republic 420 224 235 774, Denmark 45 45 76 26 00, Finland 358 (0) 9 725 72511, France 01 57 66 24 24, Germany 49 89 7413130, India 91 80 41190000, Israel 972 3 6393737, Italy 39 02 413091, Japan 81 3 5472 2970, Korea 82 02 3451 3400, Lebanon 961 (0) 1 33 28 28, Malaysia 1800 887710, Mexico 01 800 010 0793, Netherlands 31 (0) 348 433 466, New Zealand 0800 553 322, Norway 47 (0) 66 90 76 60, Poland 48 22 3390150, Portugal 351 210 311 210, Russia 7 495 783 6851, Singapore 1800 226 5886, Slovenia 386 3 425 42 00, South Africa 27 0 11 805 8197, Spain 34 91 640 0085, Sweden 46 (0) 8 587 895 00, Switzerland 41 56 2005151, Taiwan 886 02 2377 2222, Thailand 662 278 6777, Turkey 90 212 279 3031, United Kingdom 44 (0) 1635 523545

For further support information, refer to the *Technical Support Information* document that shipped with the device. To comment on National Instruments documentation, refer to the National Instruments Web site at `ni.com/info` and enter the info code `feedback`.

© 1997–2007 National Instruments Corporation. All rights reserved.

Important Information

Warranty

The SC-2345/2350 carrier is warranted against defects in materials and workmanship for a period of one year from the date of shipment, as evidenced by receipts or other documentation. National Instruments will, at its option, repair or replace equipment that proves to be defective during the warranty period. This warranty includes parts and labor.

The media on which you receive National Instruments software are warranted not to fail to execute programming instructions, due to defects in materials and workmanship, for a period of 90 days from date of shipment, as evidenced by receipts or other documentation. National Instruments will, at its option, repair or replace software media that do not execute programming instructions if National Instruments receives notice of such defects during the warranty period. National Instruments does not warrant that the operation of the software shall be uninterrupted or error free.

A Return Material Authorization (RMA) number must be obtained from the factory and clearly marked on the outside of the package before any equipment will be accepted for warranty work. National Instruments will pay the shipping costs of returning to the owner parts which are covered by warranty.

National Instruments believes that the information in this document is accurate. The document has been carefully reviewed for technical accuracy. In the event that technical or typographical errors exist, National Instruments reserves the right to make changes to subsequent editions of this document without prior notice to holders of this edition. The reader should consult National Instruments if errors are suspected. In no event shall National Instruments be liable for any damages arising out of or related to this document or the information contained in it.

EXCEPT AS SPECIFIED HEREIN, NATIONAL INSTRUMENTS MAKES NO WARRANTIES, EXPRESS OR IMPLIED, AND SPECIFICALLY DISCLAIMS ANY WARRANTY OF MERCHANTABILITY OR FITNESS FOR A PARTICULAR PURPOSE. CUSTOMER'S RIGHT TO RECOVER DAMAGES CAUSED BY FAULT OR NEGLIGENCE ON THE PART OF NATIONAL INSTRUMENTS SHALL BE LIMITED TO THE AMOUNT THERETOFORE PAID BY THE CUSTOMER. NATIONAL INSTRUMENTS WILL NOT BE LIABLE FOR DAMAGES RESULTING FROM LOSS OF DATA, PROFITS, USE OF PRODUCTS, OR INCIDENTAL OR CONSEQUENTIAL DAMAGES, EVEN IF ADVISED OF THE POSSIBILITY THEREOF. This limitation of the liability of National Instruments will apply regardless of the form of action, whether in contract or tort, including negligence. Any action against National Instruments must be brought within one year after the cause of action accrues. National Instruments shall not be liable for any delay in performance due to causes beyond its reasonable control. The warranty provided herein does not cover damages, defects, malfunctions, or service failures caused by owner's failure to follow the National Instruments installation, operation, or maintenance instructions; owner's modification of the product; owner's abuse, misuse, or negligent acts; and power failure or surges, fire, flood, accident, actions of third parties, or other events outside reasonable control.

Copyright

Under the copyright laws, this publication may not be reproduced or transmitted in any form, electronic or mechanical, including photocopying, recording, storing in an information retrieval system, or translating, in whole or in part, without the prior written consent of National Instruments Corporation.

National Instruments respects the intellectual property of others, and we ask our users to do the same. NI software is protected by copyright and other intellectual property laws. Where NI software may be used to reproduce software or other materials belonging to others, you may use NI software only to reproduce materials that you may reproduce in accordance with the terms of any applicable license or other legal restriction.

Trademarks

National Instruments, NI, ni.com, and LabVIEW are trademarks of National Instruments Corporation. Refer to the *Terms of Use* section on `ni.com/legal` for more information about National Instruments trademarks.

Product and company names mentioned herein are trademarks or trade names of their respective companies.

Members of the National Instruments Alliance Partner Program are business entities independent from National Instruments and have no agency, partnership, or joint-venture relationship with National Instruments.

Patents

For patents covering National Instruments products, refer to the appropriate location: **Help»Patents** in your software, the `patents.txt` file on your CD, or `ni.com/patents`.

WARNING REGARDING USE OF NATIONAL INSTRUMENTS PRODUCTS

(1) NATIONAL INSTRUMENTS PRODUCTS ARE NOT DESIGNED WITH COMPONENTS AND TESTING FOR A LEVEL OF RELIABILITY SUITABLE FOR USE IN OR IN CONNECTION WITH SURGICAL IMPLANTS OR AS CRITICAL COMPONENTS IN ANY LIFE SUPPORT SYSTEMS WHOSE FAILURE TO PERFORM CAN REASONABLY BE EXPECTED TO CAUSE SIGNIFICANT INJURY TO A HUMAN.

(2) IN ANY APPLICATION, INCLUDING THE ABOVE, RELIABILITY OF OPERATION OF THE SOFTWARE PRODUCTS CAN BE IMPAIRED BY ADVERSE FACTORS, INCLUDING BUT NOT LIMITED TO FLUCTUATIONS IN ELECTRICAL POWER SUPPLY, COMPUTER HARDWARE MALFUNCTIONS, COMPUTER OPERATING SYSTEM SOFTWARE FITNESS, FITNESS OF COMPILERS AND DEVELOPMENT SOFTWARE USED TO DEVELOP AN APPLICATION, INSTALLATION ERRORS, SOFTWARE AND HARDWARE COMPATIBILITY PROBLEMS, MALFUNCTIONS OR FAILURES OF ELECTRONIC MONITORING OR CONTROL DEVICES, TRANSIENT FAILURES OF ELECTRONIC SYSTEMS (HARDWARE AND/OR SOFTWARE), UNANTICIPATED USES OR MISUSES, OR ERRORS ON THE PART OF THE USER OR APPLICATIONS DESIGNER (ADVERSE FACTORS SUCH AS THESE ARE HEREAFTER COLLECTIVELY TERMED "SYSTEM FAILURES"). ANY APPLICATION WHERE A SYSTEM FAILURE WOULD CREATE A RISK OF HARM TO PROPERTY OR PERSONS (INCLUDING THE RISK OF BODILY INJURY AND DEATH) SHOULD NOT BE RELIANT SOLELY UPON ONE FORM OF ELECTRONIC SYSTEM DUE TO THE RISK OF SYSTEM FAILURE. TO AVOID DAMAGE, INJURY, OR DEATH, THE USER OR APPLICATION DESIGNER MUST TAKE REASONABLY PRUDENT STEPS TO PROTECT AGAINST SYSTEM FAILURES, INCLUDING BUT NOT LIMITED TO BACK-UP OR SHUT DOWN MECHANISMS. BECAUSE EACH END-USER SYSTEM IS CUSTOMIZED AND DIFFERS FROM NATIONAL INSTRUMENTS' TESTING PLATFORMS AND BECAUSE A USER OR APPLICATION DESIGNER MAY USE NATIONAL INSTRUMENTS PRODUCTS IN COMBINATION WITH OTHER PRODUCTS IN A MANNER NOT EVALUATED OR CONTEMPLATED BY NATIONAL

INSTRUMENTS, THE USER OR APPLICATION DESIGNER IS ULTIMATELY RESPONSIBLE FOR VERIFYING AND VALIDATING THE SUITABILITY OF NATIONAL INSTRUMENTS PRODUCTS WHENEVER NATIONAL INSTRUMENTS PRODUCTS ARE INCORPORATED IN A SYSTEM OR APPLICATION, INCLUDING, WITHOUT LIMITATION, THE APPROPRIATE DESIGN, PROCESS AND SAFETY LEVEL OF SUCH SYSTEM OR APPLICATION.

Conventions

The following conventions are used in this manual:

<>

Angle brackets that contain numbers separated by an ellipsis represent a range of values associated with a bit or signal name—for example, AO <3..0>.

»

The » symbol leads you through nested menu items and dialog box options to a final action. The sequence **File»Page Setup»Options** directs you to pull down the **File** menu, select the **Page Setup** item, and select **Options** from the last dialog box.

This icon denotes a note, which alerts you to important information.

This icon denotes a caution, which advises you of precautions to take to avoid injury, data loss, or a system crash. When this symbol is marked on the product, refer to the *Read Me First: Safety and Radio-Frequency Interference* document shipped with the product for precautions to take.

When symbol is marked on a product, it denotes a warning advising you to take precautions to avoid electrical shock.

When symbol is marked on a product, it denotes a component that may be hot. Touching this component may result in bodily injury.

bold

Bold text denotes items that you must select or click in the software, such as menu items and dialog box options. Bold text also denotes parameter names.

italic

Italic text denotes variables, emphasis, a cross-reference, or an introduction to a key concept. Italic text also denotes text that is a placeholder for a word or value that you must supply.

`monospace`

Text in this font denotes text or characters that you should enter from the keyboard, sections of code, programming examples, and syntax examples. This font is also used for the proper names of disk drives, paths, directories, programs, subprograms, subroutines, device names, functions, operations, variables, filenames, and extensions.

`monospace italic`

Italic text in this font denotes text that is a placeholder for a word or value that you must supply.

Contents

Chapter 1
Setting up the SC-2345/2350 Carrier

About the SCC Hardware 1-1
SC-2345 Carrier 1-1
SC-2350 Carrier 1-2
What You Need to Get Started 1-2
Installing the Driver Software 1-3
Connecting the SC-2345/2350 Carrier to the DAQ Device 1-4
Configuring the SC-2345 Carrier as a DAQ Accessory 1-4
Configuring the SC-2350 Carrier as a DAQ Accessory 1-6
TEDS 1-9
Importing TEDS Information 1-10
Importing Virtual TEDS Sensor Information 1-12
Affixing the Quick Reference Label to the SC-2345 Carrier 1-15
Connecting Power to the SC-2345/2350 Carrier 1-15
SCC-PWR01 1-17
SCC-PWR02 1-18
SCC-PWR03 1-19
Installing SCC Modules in the SC-2345/2350 Carrier 1-19

Chapter 2
Connecting Signals to the Terminal Block of the SC-2345/2350 Carrier

Rack-Mounting and Stack-Mounting Options 2-2
Installing the Rack-Mount Kit 2-2
Installing the Stack-Mount Kit 2-3

Appendix A
Specifications

Appendix B
Carrier Socket Signal Assignments

Appendix C
SCC Power Requirements and Solutions

Appendix D
Common Questions

Glossary

Index

1

Setting up the SC-2345/2350 Carrier

This document assumes you have already installed, configured, and tested the SC carrier, SCC modules, and the DAQ device to which they are connected. If you have not done so, follow the instructions in the *DAQ Getting Started Guide* and *SCC Quick Start Guide*, included with the hardware, before continuing. The *SCC Quick Start Guide* and *DAQ Getting Started Guide are also available at* `ni.com/manuals` or accessible from **Start»Programs»National Instruments»NI-DAQ»Browse Device Documentation** after you install the DAQ documentation browser.

About the SCC Hardware

The SC-2345/2350 carrier transfers signals to and from 68-pin E/M Series data acquisition (DAQ) devices, referred to as the DAQ device in this manual. When used with SCC Series modules and a shielded 68-pin cable, the SC-2345/2350 carrier offers easy-to-use, rugged, low-noise signal conditioning on a per-channel basis. The SC-2345/2350 carrier also has 42 screw terminals for direct connection to the DAQ device digital signals.

Some SC-2345 carrier enclosures are available with configurable connectors to maximize I/O flexibility through the use of *panelettes*. All SC-2345/2350 carriers are portable enclosures for laptop and desktop applications.

Optional rack-mount and stack-mount accessories enable you to mount the SC-2345/2350 carrier with configurable connectors to suit your application. The rack-mount option is available for standard 19 in. racks.

SC-2345 Carrier

The SC-2345 carrier supports analog I/O and digital I/O SCC modules. The SC-2345 is available in the following forms:

- SC-2345 connector block—the SC-2345 connector block requires you to pass input signal wires through a strain relief

- SC-2345 carrier with configurable connectors and a rear cable connector
- SC-2345 carrier with configurable connectors and a side cable connector

Note Refer to Figure 1-9 and the *SCC Quick Start Guide* for more information about all these carrier forms.

SC-2350 Carrier

The SC-2350 carrier supports analog I/O SCC modules. The SC-2350 carrier supports reading from and writing to Transducer Electronic Data Sheet (TEDS) Class II sensors for its analog input SCC modules. The SC-2350 carrier is available with configurable connectors and a side cable connector. Refer to Figure 1-9 and the *SCC Quick Start Guide* for more information.

What You Need to Get Started

To set up and use the SC-2345/2350 carrier, you need the following items:

❑ Hardware
- SC-2345/2350 carrier with one of the following factory-installed power modules:
  - SCC-PWR01
  - SCC-PWR02 and the PS01 power supply
  - SCC-PWR03 (requires a 7 to 42 VDC power supply, not included)
- 68-pin E/M Series DAQ device with a shielded 68-pin cable of less than 2 m length

or

- 100-pin E Series DAQ device with an SH1006868 cable (to connect 100-pin devices to two 68-pin connectors)
- One or more SCC modules
- Rack-mount or stack-mount kit (optional)
- One or more I/O panelettes

Note You cannot use the I/O panelettes on the SC-2345 carrier with connector block.

- Software
  - NI-DAQ 7.4 or later for Windows 2000/NT/XP

Note Software scaling of measurements is not supported on the Macintosh operating system.

- Documentation
  - *SCC Quick Start Guide*
  - 100-pin or 68-pin E/M Series DAQ device documentation
  - *DAQ Getting Started Guide*
  - *Read Me First: Safety and Radio-Frequency Interference*
  - SC-2345 carrier Quick Reference Label, if you have an SC-2345 carrier
- Tools
  - 1/8 in. flathead screwdriver
  - Numbers 1 and 2 Phillips screwdrivers
  - Wire insulation strippers

Installing the Driver Software

Install your application development environment (ADE) software and/or NI application software, if you have not already done so, according to their instructions.

Install NI-DAQ, which came with the DAQ device, if you have not already done so. If you do not have version NI-DAQ 7.4 or later, you can either download it from the National Instruments Web site at `ni.com/downloads` or contact a sales representative to request a CD.

Follow the software prompts to install NI-DAQ. If you do not see the Install NI-DAQ screen when you insert the CD, go to the Windows **Start»Run**. Type `x:\setup.exe` (*x* is the letter of your CD drive). The NI-DAQ installer detects the language of your operating system and the screens appear in that language.

Connecting the SC-2345/2350 Carrier to the DAQ Device

Caution Refer to the *Read Me First: Safety and Radio-Frequency Interference* document before removing equipment covers or connecting or disconnecting any signal wires.

Use a 68-pin shielded cable to connect the SC-2345/2350 carrier to the E/M Series DAQ device. Use connector J24 on the SC-2345/2350 carrier. The pin assignment of J24 is defined by the DAQ device MIO front connector. Refer to Figure 1-9 for the location of connector J24.

The chassis ground terminal on the SC-2345 carrier and the electromagnetic interference (EMI) gasket attached to the strain relief of the SC-2345 carrier are for grounding a floating source (1 mA maximum). Do *not* use these terminals as safety earth grounds.

Configuring the SC-2345 Carrier as a DAQ Accessory

Complete the following steps to run Measurement & Automation Explorer (MAX) and configure the SCC system:

1. Open MAX.
2. Right-click **Devices and Interfaces** and select **Create New**.
3. Under NI-DAQmx SCC Connector Block, select SC-2345. Click **Finish**.
4. In the SCC Connector Block Configuration window, configure the SCC system as follows.

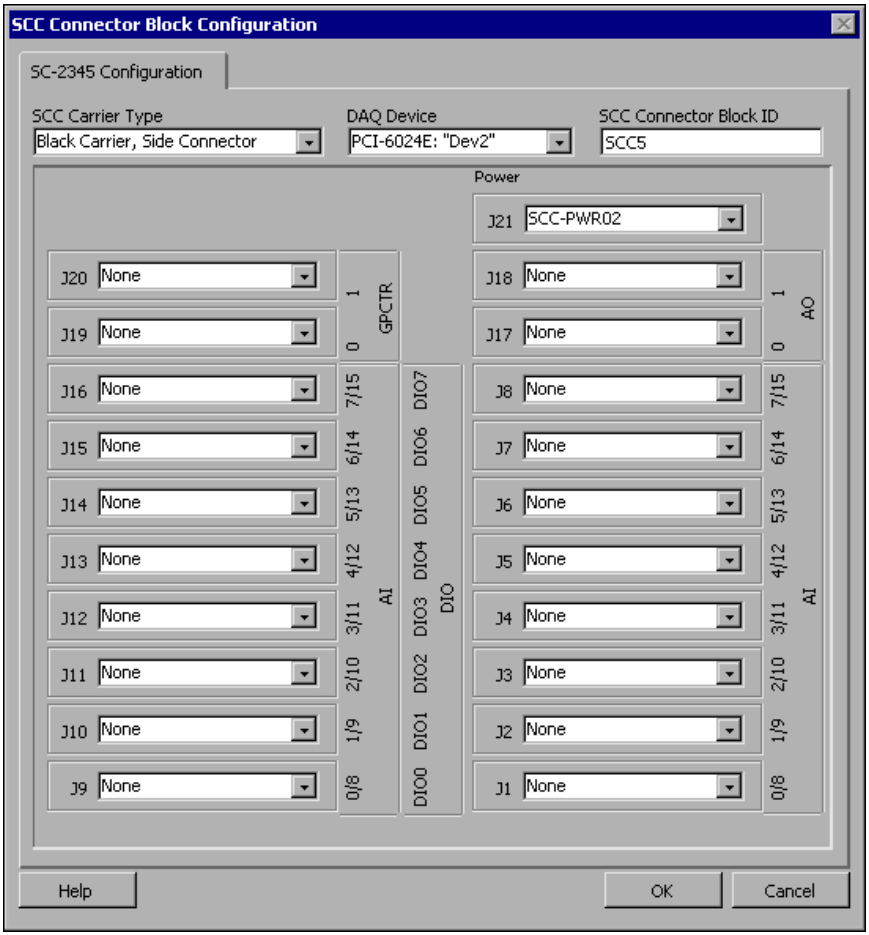

Figure 1-1. SCC Connector Block Configuration Window

a. Specify the **SCC Carrier Type**. The location of the SCC sockets changes depending on the SCC carrier type.

b. In the drop-down listbox under **DAQ Device**, select the E/M Series DAQ device that is connected to the SC-2345 carrier.

c. Type the SCC Connector Block ID. The default value is `SCC1`.

d. In the **J21** drop-down listbox next to **Power**, select the correct SC-2345 power configuration. Refer to *Connecting Power to the SC-2345/2350 Carrier* section for information about power configurations.

e. For each SCC module physically installed in the SC-2345 carrier, add a corresponding entry in the SC-2345 Connector Block Configuration window. Click the drop-down listbox and select the correct module. If the module name does not appear in the list, either the module is not allowed in that location or you do not have NI-DAQ 7.4 or later. If you do not have the current version of NI-DAQ, download it from `ni.com/downloads`.

5. Click **OK** after completing all SCC module entries.
6. Click **OK** to complete the configuration process and close MAX.

You have completed the steps to configure the SC-2345 carrier as an E/M Series DAQ device accessory.

Note Configuring the SCC system using MAX automatically sets the E/M Series DAQ device analog input mode to NRSE. If you are configuring digital SCC modules, the configuration automatically sets individual digital lines to the appropriate direction, input or output.

Configuring the SC-2350 Carrier as a DAQ Accessory

Complete the following steps to run MAX and configure the SCC system:

1. Open MAX.
2. Right-click **Devices and Interfaces** and select **Create New**.
3. Under NI-DAQmx SCC Connector Block, select **SC-2350**.

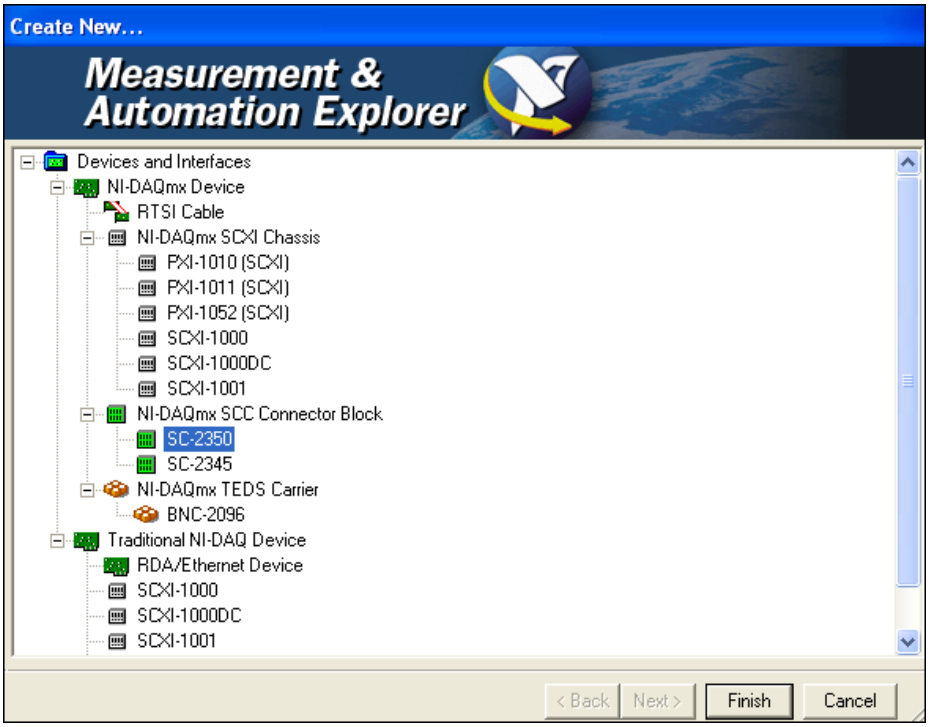

Figure 1-2. MAX Window with the SC-2350 Carrier Selected

4. Click **Finish**. The SC-2350 Configuration window opens.

5. To configure the SCC system, complete the following steps:

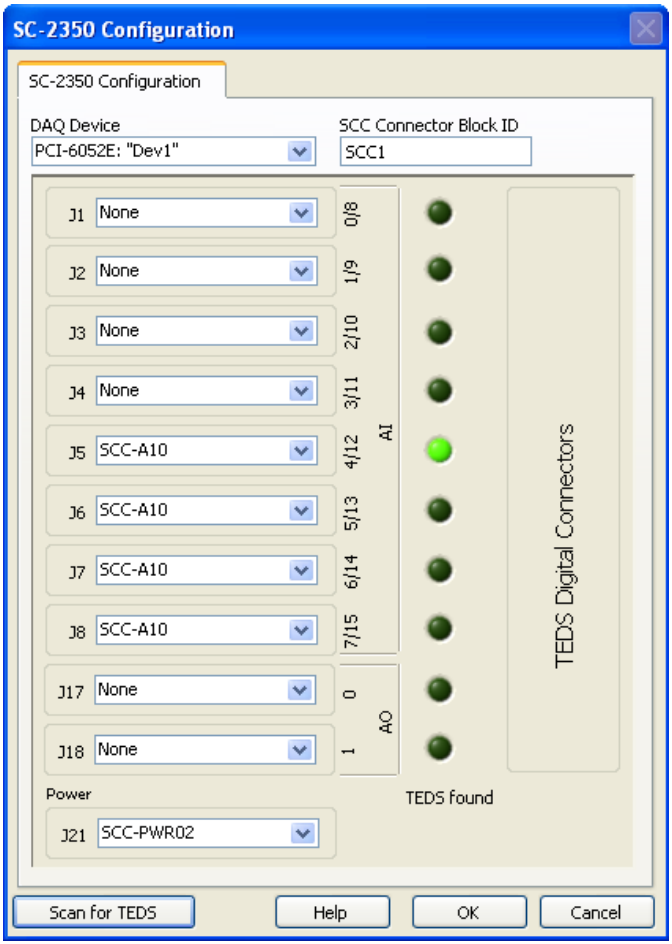

Figure 1-3. SC-2350 Configuration Window

a. In the drop-down listbox located under **DAQ Device,** select the E/M Series DAQ device that is connected to the SC-2350 carrier.

b. Type the SCC Connector Block ID. The default value is `SCC1`.

c. In the J21 drop-down listbox next to **Power**, select the correct SC-2350 carrier power configuration. Refer to the *Connecting Power to the SC-2345/2350 Carrier* section for information about power configurations.

d. For each SCC module physically installed in the SC-2350 carrier, add a corresponding entry in the SC-2350 Configuration window. Click the drop-down listbox and select the correct module. If the module name does not appear in the list, either the module is not allowed in that location or you do not have NI-DAQ 7.4 or later. If you do not have the current version of NI-DAQ, download it from `ni.com/downloads`.

e. MAX automatically scans the SCC modules you select for IEEE P1451.4 sensors that are compatible with TEDS. If MAX finds a TEDS, MAX scans and maps a TEDS icon and information under the SCC module in MAX. For more information, refer to the *TEDS* section.

6. Click **OK** after completing all SCC module entries.
7. Click **OK** to complete the configuration process and close MAX.

You have completed the steps to configure the SC-2350 carrier as an E/M Series DAQ device accessory.

Note Configuring the SCC system using MAX automatically sets the E/M Series DAQ device analog input mode to NRSE.

TEDS

This section describes TEDS.

IEEE P1451.4 specifies two classes of TEDS sensors:

- Class I—Uses the same two wires for both analog and digital signals (such as accelerometers and microphones).
- Class II—Separates analog and digital signals on different wires. In addition to the analog signal wires, uses two wires for digital signals. The SC-2350 carrier uses Class II TEDS.

On IEEE P1451.4 TEDS-compatible sensors, the manufacturer places an EEPROM on the sensor that stores a TEDS. The TEDS includes vendor and calibration information, sensor constants, and user-defined data. TEDS-compatible hardware, like the SC-2350 carrier, can read the TEDS data. Software can use TEDS data to streamline measurement setup.

Advantages and disadvantages to using TEDS-compatible sensors include the following:

- Smart, or hardware, TEDS—Provides easier connectivity. You can plug it in and automatically set up your measurement system.

- Virtual, or software, TEDS (also part of the IEEE P1451.4 specification)—Obtains sensor information from a vendor Web site, instead of an EEPROM. The information is free and does not require a hardware upgrade. However, you must manually select the correct channel and sensor.

The following resources provide additional information about IEEE P1451.4 TEDS-compatible smart sensors:

- *SCXI-1314T TEDS Bridge Sensor Terminal Block Installation Guide*
- Refer to `ni.com/info`, and enter any of the following info codes:
  - `rd2350`
  - `rdsenr`
  - `rdpnpy`
  - `rdpnsn`
  - `rdtntg`
- `ni.com/devzone`

For information about how to configure channels and tasks with the SC-2350 carrier, refer to the *SCC Quick Start Guide*.

Importing TEDS Information

To import smart hardware TEDS sensor information into MAX, first install and configure the SCC modules. Refer to the *SCC Quick Start Guide* for more information about how to install and configure the SCC modules.

If your system has smart hardware TEDS, MAX automatically scans and maps the TEDS sensor information into MAX. If MAX finds a TEDS associated with the SCC module, the LED lights up as shown in Figure 1-4.

If you later add SCC modules to your system that have TEDS-compatible sensors physically wired to them, click **Scan for TEDS** to import the TEDS sensor information into MAX and refresh the configuration tree.

As shown in Figure 1-4, MAX scans and maps the TEDS information under the SC-2350 carrier.

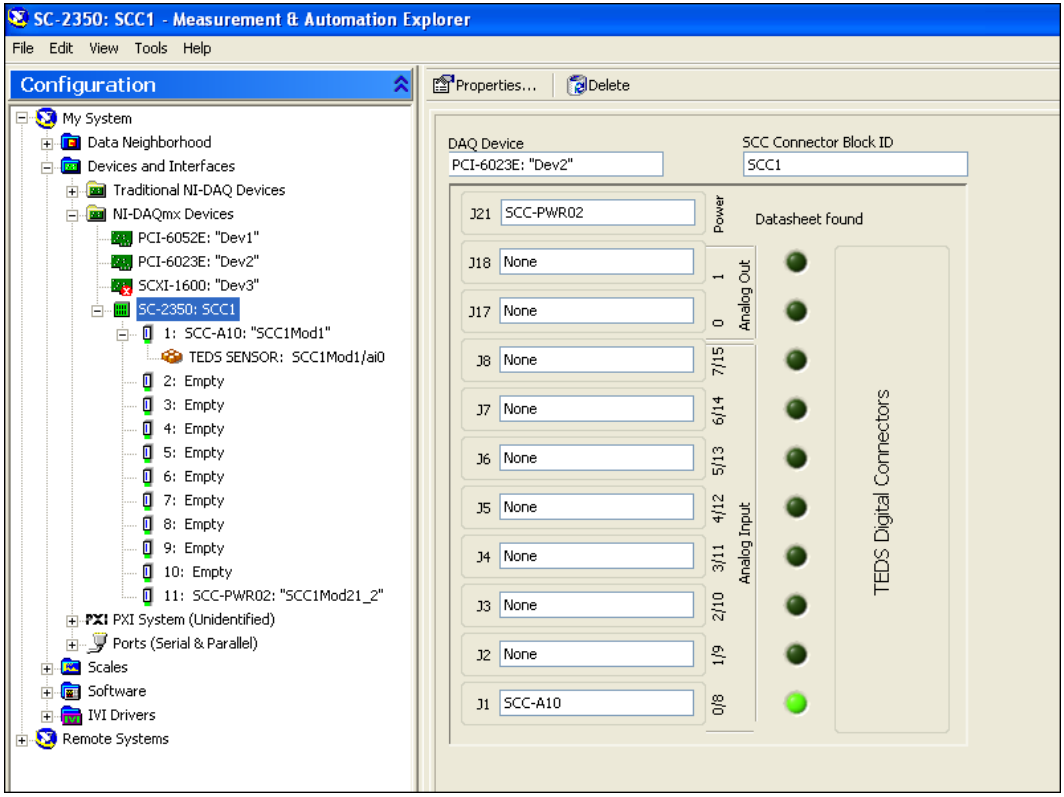

Figure 1-4. TEDS Sensor Information Scanned and Mapped Into MAX

To view the TEDS sensor data sheet, click the TEDS listing under the SC-2350 in MAX. The TEDS sensor data sheet opens as shown in Figure 1-5.

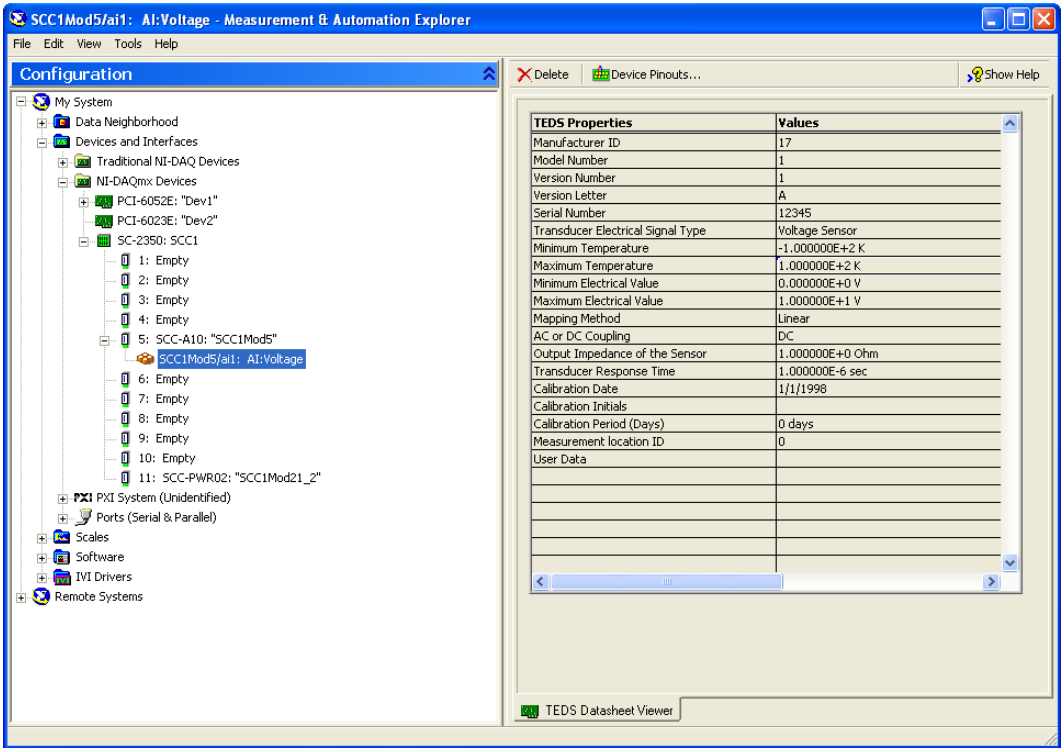

TEDS Properties	Values
Manufacturer ID	17
Model Number	1
Version Number	1
Version Letter	A
Serial Number	12345
Transducer Electrical Signal Type	Voltage Sensor
Minimum Temperature	-1.000000E+2 K
Maximum Temperature	1.000000E+2 K
Minimum Electrical Value	0.000000E+0 V
Maximum Electrical Value	1.000000E+1 V
Mapping Method	Linear
AC or DC Coupling	DC
Output Impedance of the Sensor	1.000000E+0 Ohm
Transducer Response Time	1.000000E-6 sec
Calibration Date	1/1/1998
Calibration Initials	
Calibration Period (Days)	0 days
Measurement location ID	0
User Data	

Figure 1-5. TEDS Sensor Data Sheet

Verify that the TEDS data is correctly imported. Next, create an NI-DAQmx Global Channel or Task using the channel that has a TEDS sensor associated to it. Refer to `ni.com/info` and enter `rd2350`, for more information about how to create an NI-DAQmx Global Channel or Task for a TEDS sensor.

Importing Virtual TEDS Sensor Information

To import Virtual TEDS sensor information into MAX, first install and configure the SCC modules. Refer to the *SCC Quick Start Guide*, for more information about how to install and configure the SCC modules.

To import Virtual TEDS sensor information into MAX, right-click the SCC module that you want a Virtual TEDS sensor associated to and select **Configure TEDS**.

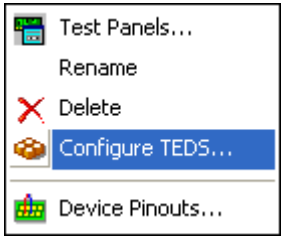

The Configure TEDS window opens as shown in Figure 1-6.

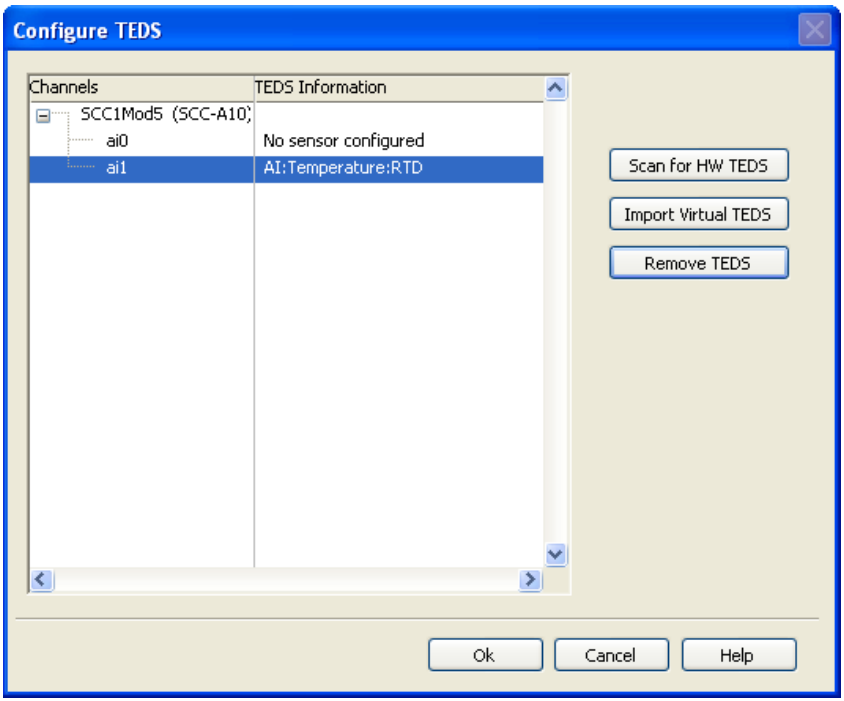

Figure 1-6. Configure TEDS Window

1. Click **Import Virtual TEDS**.

2. The virtual TEDS directory opens as shown in Figure 1-7.

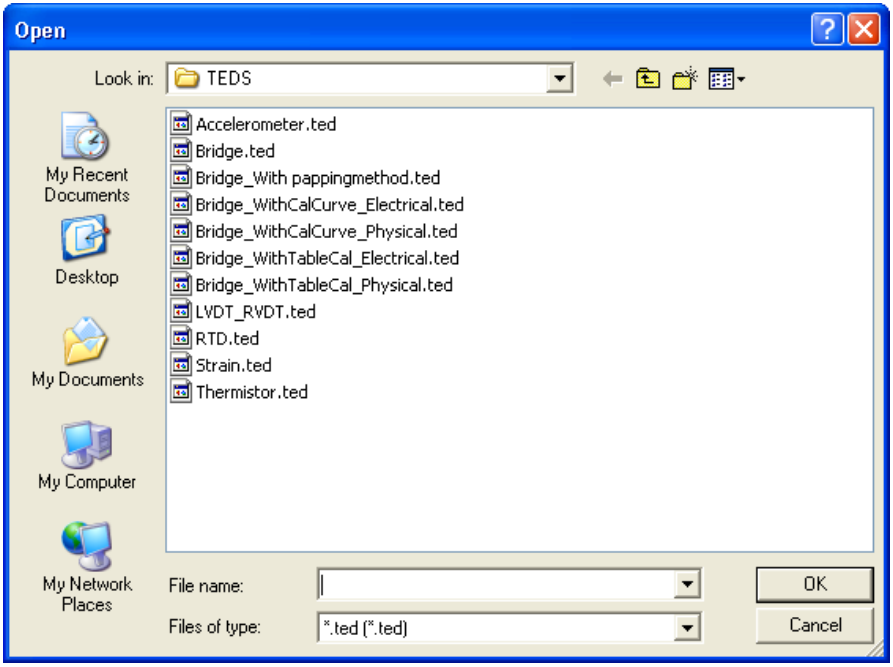

Figure 1-7. Virtual TEDS Directory

3. Press <Ctrl> and select the virtual TEDS file you want to import into MAX to associate with the SCC module.
4. Click **OK**.

   MAX scans and maps the TEDS sensor information into MAX. The LED turns green.
5. To verify that the TEDS sensor information imported correctly, click the TEDS sensor icon in the configuration tree. The TEDS sensor data sheet opens as shown in Figure 1-5.
6. Next, you need to create an NI-DAQmx Global Channel or Task using the channel that has a TEDS sensor associated to it.

Note Refer to `ni.com/info` and enter `rd2350`, for more information about how to create a NI-DAQmx Global Channel or Task for a TEDS sensor.

You have configured the SC-2350 carrier in MAX.

Affixing the Quick Reference Label to the SC-2345 Carrier

Note Only the SC-2345 carrier is shipped with a Quick Reference Label.

Affix the Quick Reference Label to the inside cover of the SC-2345 carrier. You will refer to the Quick Reference Label when installing the SCC modules.

Connecting Power to the SC-2345/2350 Carrier

The SC-2345/2350 shielded carrier has one of the following power modules factory-installed in socket J21:

- SCC-PWR01
- SCC-PWR02
- SCC-PWR03

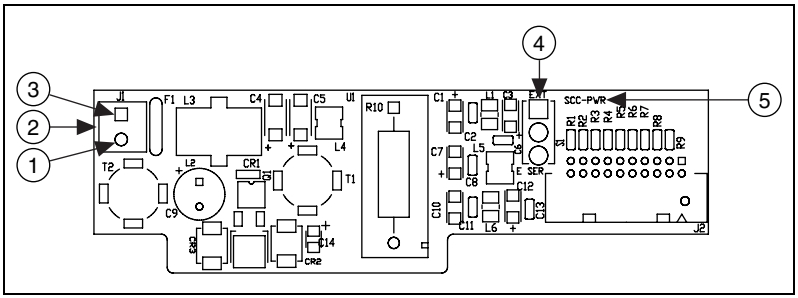

1	Negative or GND of External Supply	4	S1
2	J1	5	Product Name
3	Positive of External +5 VDC Supply		

Figure 1-8. SCC-PWR0*X* Parts Locator Diagram

Each power module supplies digital power (+5 V) for the SC-2345/2350 carrier only and analog power (±15 V) to SCC modules in the SC-2345/2350 carrier. LEDs on the SC-2345/2350 indicate whether the +5 V and ±15 V power supplies are functioning properly. If the LEDs do not light when you connect power to the SC-2345/2350 carrier, refer to Appendix C, *SCC Power Requirements and Solutions*. Figure 1-9 shows the locations of sockets J24 and J25 on each of the three types of SC-2345 carrier enclosures and the SC-2350 carrier enclosure.

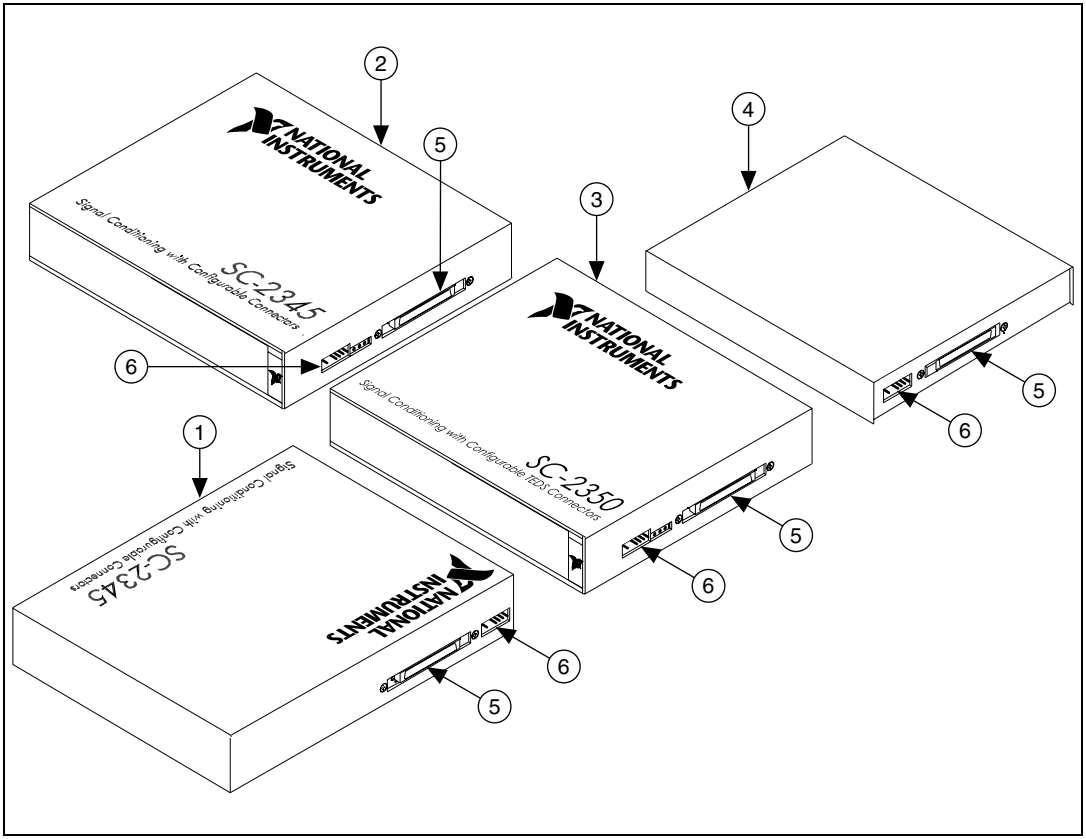

1	SC-2345 Carrier	5	Connector J24 (Connects to 68-Pin E/M Series DAQ Device)
2	SC-2345 Carrier with Configurable Connectors, Side Cabled	6	Connector J25 (Connects to PS01 Power Supply for Use with SCC-PWR02 Power Module)
3	SC-2350 Carrier with Configurable Connectors, Side Cabled		
4	SC-2345 Carrier with Configurable Connectors, Rear Cabled		

Figure 1-9. SC-2345/2350 Enclosures

SCC-PWR01

The SCC-PWR01 converts +5 V to ±15 V, which is the analog power supply that SCC modules use. Set switch S1 on the SCC-PWR01 to select the source of the +5 V as either *E SER* (E/M Series) or *EXT* (external). If you select *E SER*, the SCC-PWR01 uses +5 V power from the E/M Series DAQ device. If you select *EXT*, you must connect a +5 V supply (user supplied) to the screw terminals of J1 on the SCC-PWR01. Wire the positive lead to the screw terminal labeled *+5 V* and wire the negative lead to the screw terminal labeled *GND*. If you are using the SC-2345 carrier, pass the leads through the strain relief on the front of the enclosure. If you are using an SC-2345/2350 with configurable connectors, use a strain-relief panelette for the leads.

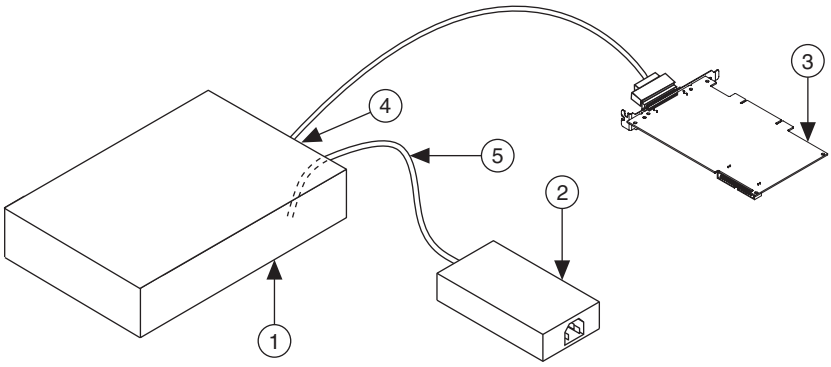

1	SC-2345/2350 Carrier	5	Positive Lead to +5 V Screw Terminal on SCC-PWR01 Connector J1
2	5 VDC Power Supply (User-Supplied, Optional)	6	Negative Lead to GND Screw Terminal on SCC-PWR01 Connector J1
3	DAQ Device		
4	J24		

Figure 1-10. Using the SCC-PWR01

SCC-PWR02

The SCC-PWR02 is a two-part system that consists of a desktop power supply (PS01) and a filtering component (SCC-PWR02 inside the carrier enclosure). The PS01 is a 15 W switching supply powered by 90 to 264 VAC (50/60 Hz 1.0 A). To install the PS01, plug the 6-position connector of the PS01 into connector J25 on the SC-2345/2350.

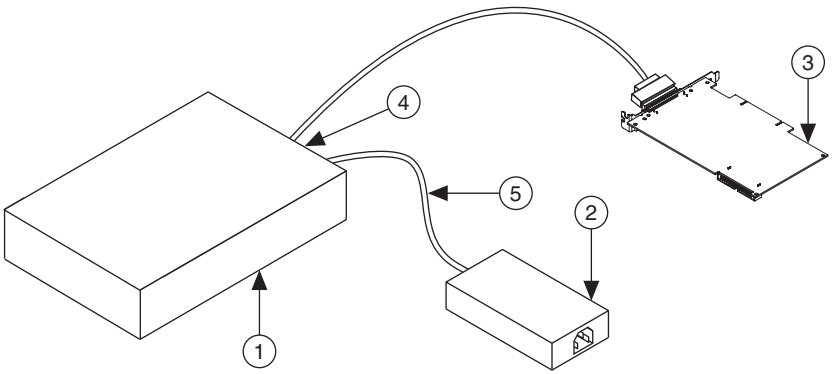

1	SC-2345/2350 Carrier	4	To Connector J24
2	PS01 Power Supply	5	To Connector J25
3	DAQ Device		

Figure 1-11. Using the SCC-PWR02

SCC-PWR03

The SCC-PWR03 converts an external voltage of 7 to 42 VDC to +5 V and ±15 V and requires an external user-supplied DC power source. Attach the voltage source to the screw terminals of J1 on the SCC‘-PWR03. Wire the positive lead to the screw terminal labeled *7–42 V* and wire the negative lead to the screw terminal labeled *GND*. If you are using the SC-2345 carrier, pass the leads through the strain relief on the front of the enclosure. If you are using an SC-2345/2350 carrier with configurable connectors, use a strain-relief panelette for the leads. You can power the SCC-PWR03 with any appropriate 7 to 42 VDC source.

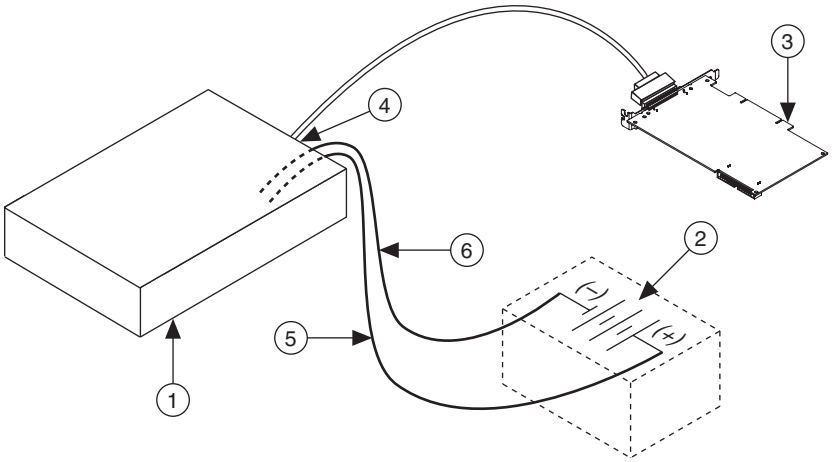

1	SC-2345/2350 Carrier	5	Negative Lead to GND Screw Terminal on SCC-PWR03 Connector J1
2	7–42 VDC Source (User-Supplied)	6	Positive Lead to +5 V Screw Terminal on SCC-PWR03 Connector J1
3	DAQ Device		
4	To Connector J24		

Figure 1-12. Using the SCC-PWR03

Installing SCC Modules in the SC-2345/2350 Carrier

For instructions about how to install SCC modules in the SC-2345/2350 carrier and information about signal conditioning with SCC modules, refer to the *SCC Quick Start Guide*.

2

Connecting Signals to the Terminal Block of the SC-2345/2350 Carrier

The SC-2345/2350 carrier has a 42-position, triple-row screw-terminal block for connecting to E/M Series DAQ device digital signals. The SC-2345 Quick Reference Label identifies the location of each signal on the terminal rows A to C. The terminal label numbers correspond to the pin number location of each signal on the 68-pin E/M Series connector. Refer to the *E Series Help* or *M Series Help* for more information about this connector. The *E Series Help* and the *M Series Help* are available for download at `ni.com/manuals` or accessible from **Start»Programs» National Instruments»NI-DAQ»Browse Device Documentation** after you install the DAQ documentation browser.

Figure 2-1 shows the locations of the digital signals on the SC-2345 and SC-2350 terminal block when using an E Series or M Series connector 0. Refer to the *M Series Help*, for specific pinout descriptions for M Series devices when using connector 1.

A		B		C	
Not Used		*Not Used*		*Not Used*	
Not Used		D GND	35	AI SENSE	62
PFI 14/FREQ OUT	1	D GND	4	PFI 10/EXTSTROBE*	45
PFI 12/CTR 0 OUT	2	D GND	36	PFI 13/CTR 1 OUT	40
PFI 8/CTR 0 SOURCE	37	D GND	39	PFI 9/CTR 0 GATE	3
PFI 6/AO START TRIG	5	D GND	7	PFI 7/AI SAMP CLK	38
PFI 4/CTR 1 GATE	41	D GND	9	PFI 5/AO SAMPLE CLK	6
PFI 2/AI CONV CLK	43	D GND	44	PFI 3/CTR 1 SOURCE	42
PFI 0/AI START TRIG	11	D GND	12	PFI 1/AI REF TRIG	10
+ 5 V	14	D GND	13	PFI 11/AI HOLD COMP	46
P0.6	16	D GND	15	P0.7	48
P0.4	19	D GND	50	P0.5	51
P0.2	49	D GND	18	P0.3	47
P0.0	52	D GND	53	P0.1	17

Figure 2-1. Terminal Block I/O Connector Pin Assignments E Series and M Series Connector 0

Rack-Mounting and Stack-Mounting Options

To use the SC-2345/2350 carrier with configurable connectors in a standard 19 in. rack-mount configuration, install the optional CA-1000 rack-mount kit. To use the SC-2345/2350 carrier with configurable connectors in a desktop stacking configuration, install the optional CA-1000 stack-mount kit.

Installing the Rack-Mount Kit

Refer to Figure 2-2 and complete the following steps to install the CA-1000 rack-mount kit on the SC-2345/2350 carrier with configurable connectors:

1. Remove the rubber feet from the bottom of the SC-2345/2350 carrier enclosure.
2. Attach a rack-mount bracket to both ends of the enclosure with four 4-40 × 1/4 in. screws from the rack-mount kit.

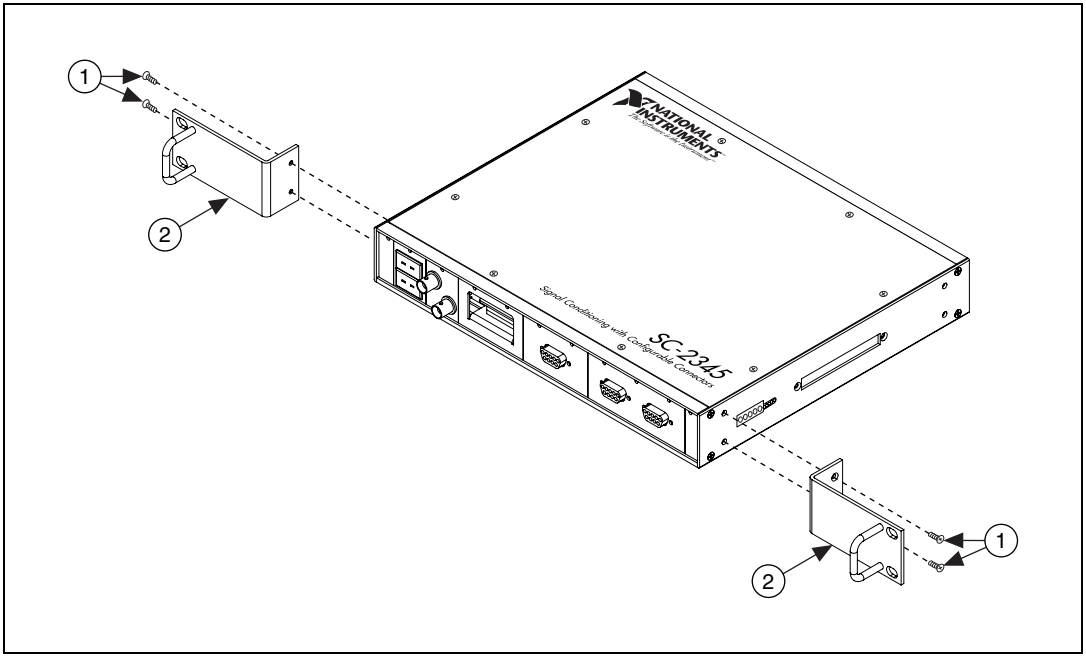

1 4-40 × 1/4 in. Screws	2 Rack-Mount Brackets

Figure 2-2. Rack-Mount Option

Installing the Stack-Mount Kit

Refer to Figure 2-3 and complete the following steps to install the CA-1000 stack-mount kit on the SC-2345/2350 carrier with configurable connectors:

1. Remove the rubber feet from all except the bottom enclosure.
2. Attach the stack-mount brackets to both ends of the lower enclosure with the 4-40 × 1/4 in. flathead screws from the stack-mount kit.
3. Place the upper enclosure on top of the lower enclosure.
4. Attach the stack-mount brackets to both ends of both enclosures with the 4-40 × 1/4 in. flathead screws from the stack-mount kit.

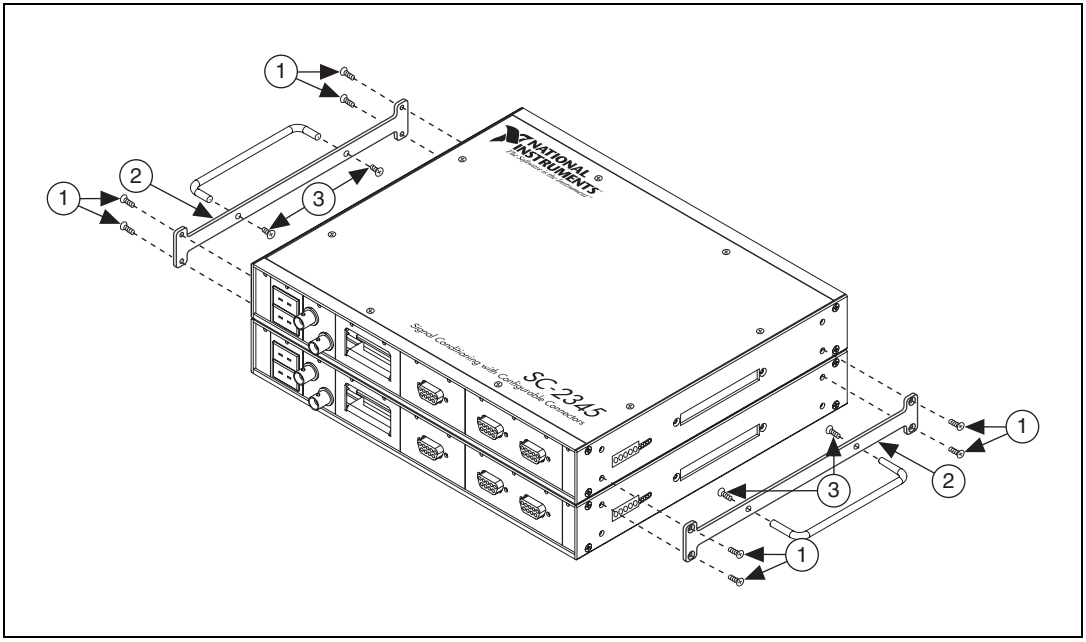

1 4-40 × 1/4 in. Screws	2 Stack-Mount Brackets	3 Handle Screws

Figure 2-3. Stack-Mount Option

You can stack additional enclosures by using additional stack-mount kits. You can remove the stack-mount kit handles, if necessary, by removing the four screws that attach the handles.

A

Specifications

These ratings are typical at 25 °C unless otherwise stated.

SC-2345 Carrier

Analog Input and Output

I/O connections ..... Sixteen, 20-pin connectors for analog-input SCC modules (eight are shared with digital); two 20-pin connectors for analog-output SCC modules

Digital Input and Output

I/O connections ..... Eight, 20-pin connectors for digital (shared with analog input) 42-position, triple-row terminal block for digital and counter

Onboard Voltage Reference

Output voltage..... 5.000 V ±2.5 mV

Output voltage drift..... 5 ppm/°C max (at 0 to 70 °C)

Long-term stability..... ±15 ppm/1,000 h

Output noise (0.1 to 10 Hz)..... 4 $\mu V_{p\text{-}p}$

Load regulation

Sourcing $0 < I_{OUT} < 10$ mA..... 100 µV/mA

Sinking $-10 < I_{OUT} < 0$ mA..... 400 µV/mA

Quiescent current ..... 2 mA

Power consumption..... 30 mW, 15 V

LED Power Requirements

6.5 mA at 5 V .....32.5 mW

9 mA at 15 V .....135 mW

9 mA at –15 V .....135 mW

Maximum Working Voltage

Cautions Refer to your DAQ device documentation for the voltage specifications for your DAQ device.

Ensure that signals connected to SCC modules are used within the voltage ratings of the modules to which they are connected. Refer to your SCC-*XX* user manual for the voltage specifications for your SCC module.

Maximum working voltage refers to the signal voltage plus the common-mode voltage.

Channel-to-earth .....11 VDC

Measurement Category I

Caution Do *not* use the SCC-2345 for connections to signals or for measurements within Categories II, III, or IV.

Physical

Field-wiring diameter
(terminal block) .....26 to 16 AWG

SC-2345 Connector Block

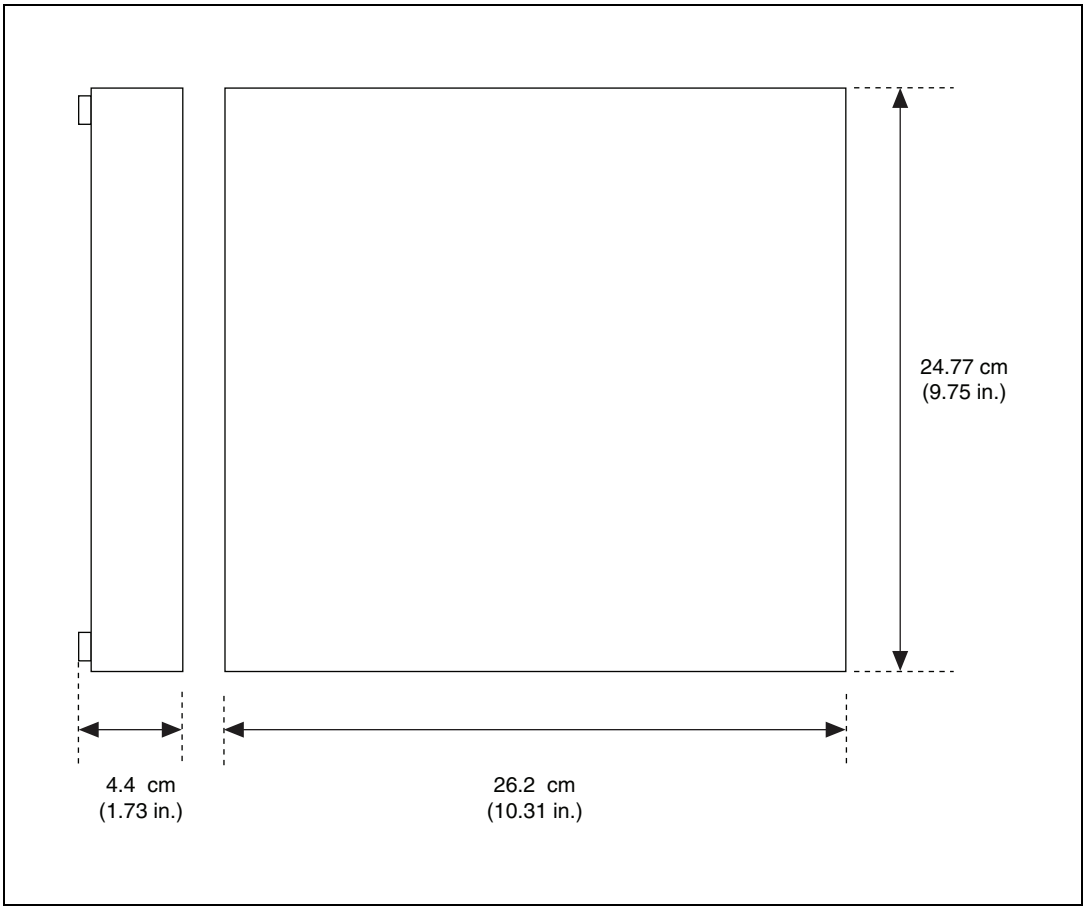

Figure A-1. SC-2345 Connector Block Dimensions

Weight ..... 1.66 kg (3 lb 10 oz)

I/O connectors ..... One 68-pin male SCSI connector; one 6-pin male power connector

SC-2345 with Configurable Connectors (Rear and Side Cabled)

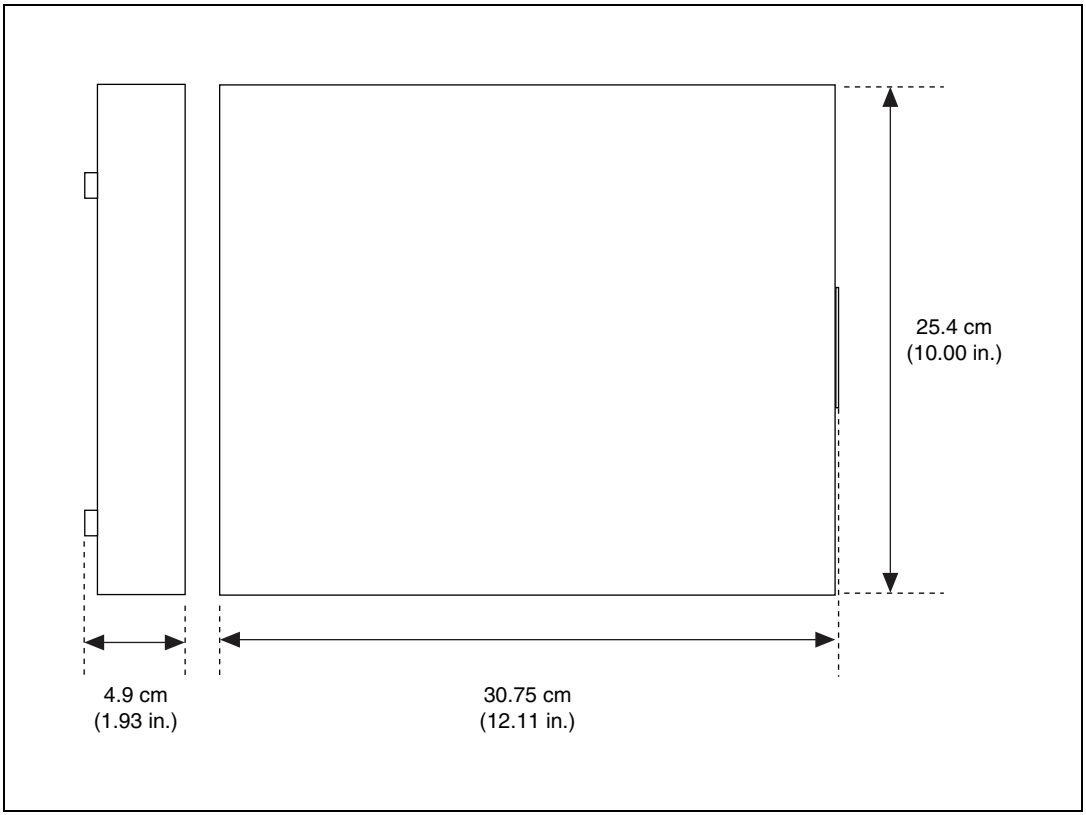

Figure A-2. SC-2345 With Configurable Connectors Dimensions

Weight .....1.51 kg (3 lb 5 oz)

I/O connectors.....User-defined panelettes;
one 68-pin male SCSI connector;
one 6-pin male power connector

Environmental

Operating temperature..... 0 to 50 °C

Storage temperature ..... –20 to 70 °C

Humidity ..... 10 to 90% RH, noncondensing

Maximum altitude ..... 2,000 m

Pollution Degree (indoor use only)..... 2

Safety

This product is designed to meet the requirements of the following standards of safety for electrical equipment for measurement, control, and laboratory use:

- IEC 61010-1, EN-61010-1
- UL 61010-1, CSA 61010-1

Note For UL and other safety certifications, refer to the product label or visit `ni.com/certification`, search by model number or product line, and click the appropriate link in the Certification column.

Electromagnetic Compatibility

This product is designed to meet the requirements of the following standards of EMC for electrical equipment for measurement, control, and laboratory use:

- EN 61326 EMC requirements; Minimum Immunity
- EN 55011 Emissions; Group 1, Class A
- CE, C-Tick, ICES, and FCC Part 15 Emissions; Class A

Note For EMC compliance, operate this device according to product documentation.

CE Compliance

This product meets the essential requirements of applicable European Directives, as amended for CE marking, as follows:

- 2006/95/EC; Low-Voltage Directive (safety)
- 2004/108/EEC; Electromagnetic Compatibility Directive (EMC)

Note Refer to the Declaration of Conformity (DoC) for this product for any additional regulatory compliance information. To obtain the DoC for this product, visit `ni.com/certification`, search by model number or product line, and click the appropriate link in the Certification column.

Environmental Management

National Instruments is committed to designing and manufacturing products in an environmentally responsible manner. NI recognizes that eliminating certain hazardous substances from our products is beneficial not only to the environment but also to NI customers.

For additional environmental information, refer to the *NI and the Environment* Web page at `ni.com/environment`. This page contains the environmental regulations and directives with which NI complies, as well as any other environmental information not included in this document.

Waste Electrical and Electronic Equipment (WEEE)

EU Customers At the end of their life cycle, all products *must* be sent to a WEEE recycling center. For more information about WEEE recycling centers and National Instruments WEEE initiatives, visit `ni.com/environment/weee.htm`.

电子信息产品污染控制管理办法 （中国 RoHS）

中国客户 National Instruments 符合中国电子信息产品中限制使用某些有害物质指令 (RoHS)。关于 National Instruments 中国 RoHS 合规性信息，请登录 `ni.com/environment/rohs_china`。(For information about China RoHS compliance, go to `ni.com/environment/rohs_china`.)

SC-2350

Analog Input and Output

I/O connections ..... Eight, 20-pin connectors and eight 2-channel TEDS screw terminal blocks for analog-input SCC modules; two, 20-pin connectors for analog output SCC modules

Typical maximum smart TEDS sensor cable length ..... 61 m (200 ft)

IEEE P1451.4 compliance ..... Tier 2 (standard system capability)

Note Future releases of NI-DAQmx might contain support for TEDS analog ouput devices.

Onboard Voltage Reference

Output voltage..... 5.000 V ±2.5 mV

Output voltage drift..... 5 ppm/°C max (at 0 to 70 °C)

Long-term stability..... ±15 ppm/1,000 h

Output noise (0.1 to 10 Hz)..... 4 μV_{p-p}

Load regulation

Sourcing $0 < I_{OUT} < 10$ mA..... 100 µV/mA

Sinking $-10 < I_{OUT} < 0$ mA..... 400 µV/mA

Quiescent current ..... 2 mA

Power consumption..... 30 mW

LED Power Requirements

6.5 mA at 5 V ..... 32.5 mW

9 mA at 15 V ..... 135 mW

9 mA at –15 V ..... 135 mW

Maximum Working Voltage

Cautions Refer to your DAQ device documentation for the voltage specifications for your DAQ device.

Ensure that signals connected to SCC modules are used within the voltage ratings of the modules to which they are connected. Refer to your SCC-*XX* user manual for the voltage specifications for your SCC module.

Maximum working voltage refers to the signal voltage plus the common-mode voltage.

Channel-to-earth .....11 VDC

Measurement Category I

Caution Do *not* use the SCC-2350 for connections to signals or for measurements within Categories II, III, or IV.

Physical

Field-wiring diameter
(terminal block) ..... 26 to 16 AWG

SC-2350 with Configurable Connectors (Side Cabled)

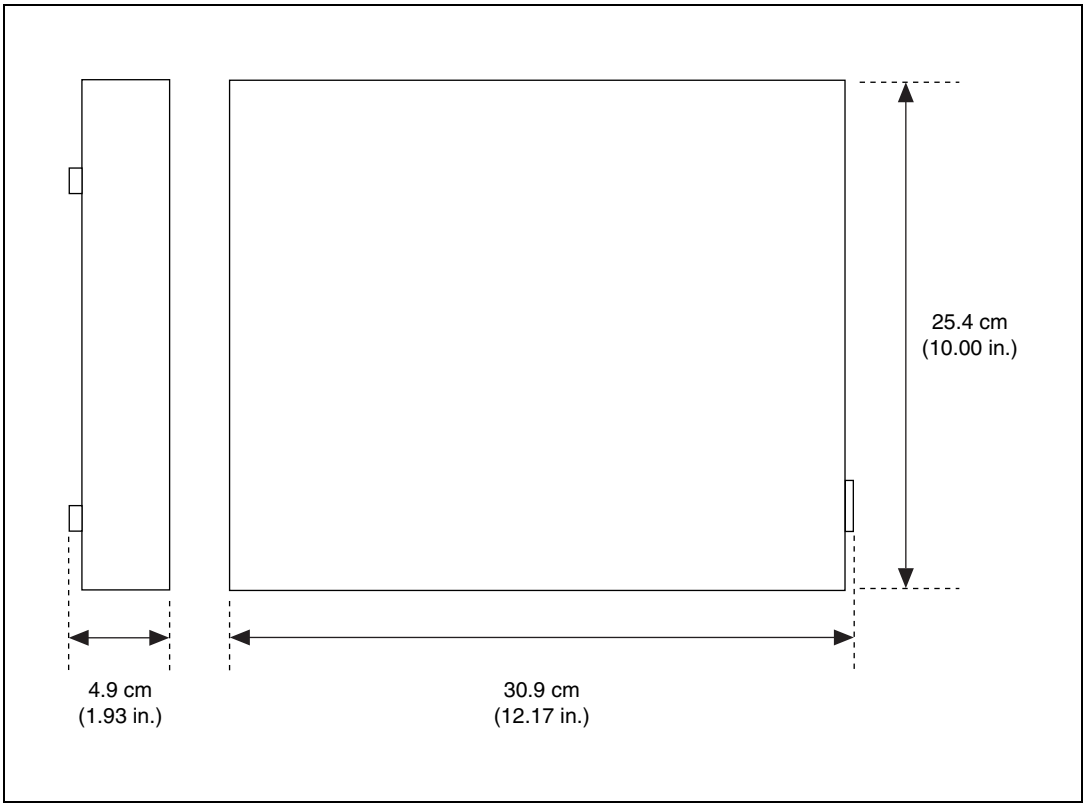

Figure A-3. SC-2350 Dimensions

Weight ..... 1.60 kg (3 lb 8.8 oz)

I/O connectors ..... User-defined panelettes;
one 68-pin male SCSI connector;
one 6-pin male power connector;
one 50-pin male test header

Environmental

Operating temperature .....0 to 50 °C

Storage temperature .....–20 to 70 °C

Humidity .....10 to 90% RH, noncondensing

Maximum altitude.....2,000 m

Pollution Degree (indoor use only) 2

Safety

This product is designed to meet the requirements of the following standards of safety for electrical equipment for measurement, control, and laboratory use:

- IEC 61010-1, EN-61010-1
- UL 61010-1, CSA 61010-1

Note For UL and other safety certifications, refer to the product label or visit `ni.com/certification`, search by model number or product line, and click the appropriate link in the Certification column.

Electromagnetic Compatibility

This product is designed to meet the requirements of the following standards of EMC for electrical equipment for measurement, control, and laboratory use:

- EN 61326 EMC requirements; Minimum Immunity
- EN 55011 Emissions; Group 1, Class A
- CE, C-Tick, ICES, and FCC Part 15 Emissions; Class A

Note For EMC compliance, operate this device according to product documentation.

CE Compliance

This product meets the essential requirements of applicable European Directives, as amended for CE marking, as follows:

- 2006/95/EC; Low-Voltage Directive (safety)
- 2004/108/EEC; Electromagnetic Compatibility Directive (EMC)

Note Refer to the Declaration of Conformity (DoC) for this product for any additional regulatory compliance information. To obtain the DoC for this product, visit `ni.com/certification`, search by model number or product line, and click the appropriate link in the Certification column.

Environmental Management

National Instruments is committed to designing and manufacturing products in an environmentally responsible manner. NI recognizes that eliminating certain hazardous substances from our products is beneficial not only to the environment but also to NI customers.

For additional environmental information, refer to the *NI and the Environment* Web page at `ni.com/environment`. This page contains the environmental regulations and directives with which NI complies, as well as any other environmental information not included in this document.

Waste Electrical and Electronic Equipment (WEEE)

EU Customers At the end of their life cycle, all products *must* be sent to a WEEE recycling center. For more information about WEEE recycling centers and National Instruments WEEE initiatives, visit `ni.com/environment/weee.htm`.

电子信息产品污染控制管理办法 （中国 RoHS）

中国客户 National Instruments 符合中国电子信息产品中限制使用某些有害物质指令 (RoHS)。关于 National Instruments 中国 RoHS 合规性信息，请登录 `ni.com/environment/rohs_china`。(For information about China RoHS compliance, go to `ni.com/environment/rohs_china`.)

SCC Power Modules

SCC-PWR01

Input

DC input voltage

From external power source .....+5 VDC ±5%

From E/M Series DAQ device .....+5 VDC ±5%

DC input power .....500 mW without SCC modules

Output

Voltage Source	Maximum Power Output by Voltage Level		
	+5 VDC (+4.17 to +5.25 VDC)	**+15 VDC (+14.20 to +15.25 VDC)**	**–15 VDC (–14.20 to –15.25 VDC)**
AT/PCI/PXI E/M Series DAQ Device[1]	4.18 W*	0.87 W	0.87 W
DAQCard/DAQPad E Series DAQ Device[2]	0.80 W*	0.24 W	0.24 W
External +5 VDC Supply	6.97 W*	0.87 W	0.87 W

[1] These power calculations apply to E/M Series DAQ devices that provide +5 VDC at 1 A at the I/O connector. Refer to the specifications for the E/M Series DAQ device. Tests were performed using a 1 m cable. Longer cables yield a lower level of power, but the difference is negligible for cables of 2 m or less in length.

[2] These power calculations apply to E Series DAQ devices that provide +5 VDC at 250 mA at the I/O connector. Refer to the specifications for the E Series DAQ device. Tests were performed using a 1 m cable. Longer cables yield a lower level of power, but the difference is negligible for cables of 2 m or less in length.

* Subtract 0.08 W for the SC-2350 carrier due to its TEDS circuitry.

Nominal Voltage Level	Efficiency	Line Regulation	Load Regulation	Ripple and Noise (DC to 10 MHz)
+5 VDC	100%	System-dependent	System-dependent	System-dependent
+15 VDC	62%	±0.5% typ	±0.1% typ	15 mV_{rms} typ
–15 VDC	62%	±0.5% typ	±0.1% typ	20 mV_{rms} typ

Physical

Screw-terminal wiring diameter
(J1 connector)..... 24 to 16 AWG

SCC-PWR02

PS01 Power Supply

AC input voltage ..... 100 to 240 VAC

AC input frequency ..... 47 to 63 Hz

AC input current (steady state) ..... 1.0 A max

In-rush current (at cold start) ..... 30 A max

Max output ..... 45 W

Efficiency ..... 65% typ

Switching frequency ..... 50 kHz nominal

Measurement Category II

Output (SCC-PWR02 Module)

Voltage Range	Maximum Power Available	Line Regulation	Load Regulation	Output Noise (DC to 10 MHz)
+5 VDC (+4.64 to +5.25 VDC)	6.97 W*	±1%	±9%	20 mV_{rms} typ
+15 VDC (+14.45 to +15.25 VDC)	4.37 W	±5%	±10%	20 mV_{rms} typ
–15 VDC (–14.45 to –15.25 VDC)	4.37 W	±5%	±10%	20 mV_{rms} typ

* Subtract 0.08 W for the SC-2350 carrier due to its TEDS circuitry.

Other Features (PS01)

Short-circuit protection ..... Yes

Overvoltage protection..... 343 VAC (130%)

Dimensions of the external supply..... 15.5 cm × 8.5 cm × 4.8 cm
(6.1 in. × 3.3 in. × 1.9 in.)

Environment for External Supply

Operating temperature .....0 to 40 °C

Storage temperature .....–20 to 80 °C

Relative humidity .....10 to 90%, noncondensing

Maximum altitude.....2,000 m

Pollution Degree (indoor use only) 2

SCC-PWR03

Input

DC input voltage.....7 to 42 VDC

Reverse-voltage protection .....–42 VDC max

Power .....325 mA at 12 VDC

Output

Voltage Range	Maximum Power Available	Line Regulation	Load Regulation	Output Noise (DC to 10 MHz)
+5 VDC (+4.36 to +5.25 VDC)	6.55 W*	±1%	±12%	20 mV_{rms} typ
+15 VDC (+14.25 to +15.75 VDC)	0.87 W	±5%	±10%	20 mV_{rms} typ
–15 VDC (–14.45 to –15.75 VDC)	0.87 W	±5%	±10%	20 mV_{rms} typ
* Subtract 0.08 W for the SC-2350 carrier due to its TEDS circuitry.				

Physical

Screw-terminal wiring diameter
(J1 connector on module) .....24 to 16 AWG

B

Carrier Socket Signal Assignments

This appendix contains descriptions of all the signals carried by the 20-pin sockets on the SC-2345/2350 carrier. The pins are laid out on SCC modules as shown in Figure B-1. For more information about the SC-2345/2350 carrier connector locations, refer to the *SCC Quick Start Guide*.

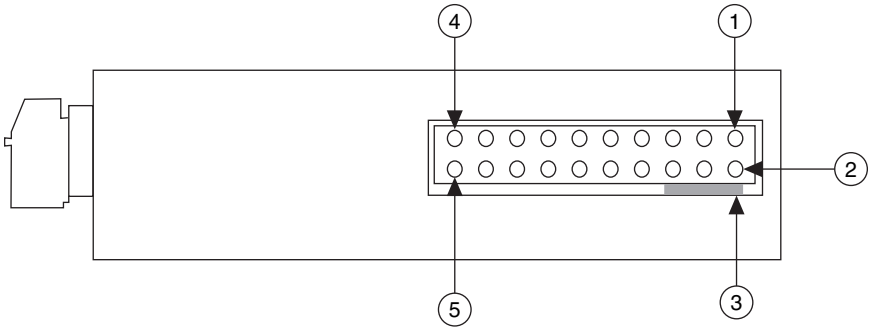

1 Pin 1	2 Pin 2	3 PWB Key	4 Pin 19	5 Pin 20

Figure B-1. SCC Module Bottom View

SC-2345 Carrier

Table B-1. SC-2345 Carrier—Sockets J1–J16

Pin Number	J9–J16: Digital I/O or Single-Stage Analog Input	J1–J8: Single- or Dual-Stage Analog Input
1	AI (*X*)+ to second stage	AI (*X*) to DAQ device
2	AI (*X*)– to second stage	—
3	AI SENSE	AI SENSE
4	AI (*X*+8)+ to second stage	AI (*X*+8) to DAQ device
5	AI SENSE	—
6	AI GND	AI GND
7	P0.(*X*)	PFI 7/AI SAMP CLK
8	AI (*X*+8)– to second stage	—
9	+5 V	+5 V
10	GND	GND
11	A GND	A GND
12	REF 5 V	REF 5 V
13	+15 V	+15 V
14	–15 V	–15 V
15	—	AI SENSE
16	To second stage	To first stage
17	—	AI (*X*)– from first stage
18	—	AI (*X*+8)+ from first stage
19	—	AI (*X*)+ from first stage
20	—	AI (*X*+8)– from first stage

Table B-2. SC-2345 Carrier—Sockets J17–J18

Pin Number	J17–J18: Analog Output DAC0	J17–J18: Analog Output DAC1
1	AO 0	AO 1
2	AO GND	AO GND
3	AO 1	AO 0
4	AO GND	AO GND
5	APFI 0/AO EXT REF	APFI 0/AO EXT REF
6	PFI 5/AO SAMP CLK	PFI 5/AO SAMP CLK
7	—	—
8	PFI 6/AO START TRIG	PFI 6/AO START TRIG
9	+5 V	+5 V
10	GND	GND
11	A GND	A GND
12	REF 5 V	REF 5 V
13	+15 V	+15 V
14	–15 V	–15 V
15	—	—
16	—	—
17	—	—
18	—	—
19	—	—
20	—	—

Table B-3. SC-2345 Carrier—Sockets J19–J20

Pin Number	J19–J20: GPCTR 0	J19–J20: GPCTR 1
1	PFI 12/CTR0 OUT	PFI 13/CTR1 OUT
2	PFI 14/FREQ OUT	PFI 14/FREQ OUT
3	PFI 9/CTR 0 GATE	PFI 4/ CTR 1 GATE
4	P0.6	P0.7
5	PFI 8/CTR 0 SOURCE	PFI 3/CTR 1 SOURCE
6	—	—
7	—	—
8	—	—
9	+5 V	+5 V
10	GND	GND
11	A GND	A GND
12	REF 5 V	REF 5 V
13	+15 V	+15 V
14	–15 V	–15 V
15	—	—
16	—	—
17	—	PFI 1/AI REF TRIG
18	PFI 5/AO SAMP CLK	PFI 11/AI HOLD COMP
19	PFI 0/AI START TRIG	PFI 0/AI START TRIG
20	PFI 6/AO START TRIG	PFI 10/EXTSTROBE

SC-2350

Table B-4. SC-2350—Socket J1–J8

Pin Number	J1–J8: Analog Input
1	AI (*X*) to DAQ device
2	—
3	AI SENSE
4	AI (*X*+8) to DAQ device
5	—
6	AI GND
7	PFI 7/AI SAMP CLK
8	—
9	+5 V
10	GND
11	A GND
12	REF 5 V
13	+15 V
14	–15 V
15	1-Wire (*X*+8)
16	1-Wire (*X*)
17	—
18	—
19	—
20	—

Table B-5. SC-2350—Sockets J17–J18

Pin Number	J17: Analog Output DAC0	J18: Analog Output DAC1
1	AO 0	AO 1
2	AO GND	AO GND
3	AO 1	AO 0
4	AO GND	AO GND
5	APFI 0/AO EXT REF	APFI 0/AO EXT REF
6	PFI 5/AO SAMP CLK	PFI 5/AO SAMP CLK
7	—	—
8	PFI 6/AO START TRIG	PFI 6/AO START TRIG
9	+5 V	+5 V
10	GND	GND
11	A GND	A GND
12	REF 5 V	REF 5 V
13	+15 V	+15 V
14	–15 V	–15 V
15	1-Wire (AO 1)	1-Wire (AO 0)
16	1-Wire (AO 0)	1-Wire (AO 1)
17	—	—
18	—	—
19	—	—
20	—	—

SC-2345/2350 Carrier

Table B-6. SC-2345/2350 Carrier—Socket J21

Pin Number	Signal
1	A GND
2	A GND/AI GND
3	+15 V
4	–15 V
5	+5 V
6	—
7	External +5 VDC
8	External chassis GND
9	External +5 VDC
10	External chassis GND
11	External +15 VDC
12	External common
13	External –15 VDC
14	External common
15	DAQ device +5 VDC
16	DAQ device GND
17	DAQ device +5 VDC
18	DAQ device GND
19	DAQ device +5 VDC
20	DAQ device GND

Table B-7. SC-2345/2350 Carrier—SCC-PWR0*X* Module Pin Signal Assignments (Socket J21)

Pin Number	PWR01 Signal	PWR02 Signal	PWR03 Signal	Signal Description
1	A GND	A GND	A GND	Ground reference for ±15 V supply
2	AI GND	AI GND	AI GND	Signal ground from E/M Series DAQ device
3	+15 V out	+15 V out	+15 V out	+15 V supply to all SCC modules
4	–15 V out	–15 V out	–15 V out	–15 V supply to all SCC modules
5	—	External +5 V out	—	+5 V supply to all SCC modules
6	—	—	—	—
7	—	External +5 VDC	—	From external supply
8	—	—	—	—
9	—	External +5 VDC	—	From external supply
10	—	—	—	—
11	—	External +15 VDC	—	From external supply
12	—	External common DC	—	From external supply
13	—	External –15 VDC	—	From external supply
14	—	External common DC	—	From external supply
15	DAQ device +5 V	—	—	From E/M Series DAQ device
16	DAQ device GND	—	—	From E/M Series DAQ device
17	DAQ device +5 V	—	—	From E/M Series DAQ device
18	DAQ device GND	—	—	From E/M Series DAQ device
19	DAQ device +5 V	—	—	From E/M Series DAQ device
20	DAQ device GND	—	—	From E/M Series DAQ device

Table B-8. SC-2350 TEDS Test Header Pin Signal Assignments (Socket J35)

Connector Diagram	Signal Name	Pin Number	Pin Number	Signal Name
1 2	AI TEDS CHDATA (0)	1	2	AI TEDS CHRTN (0)
3 4	AI TEDS CHDATA (8)	3	4	AI TEDS CHRTN (8)
5 6	AI TEDS CHDATA (1)	5	6	AI TEDS CHRTN (1)
7 8	AI TEDS CHDATA (9)	7	8	AI TEDS CHRTN (9)
9 10	AI TEDS CHDATA (2)	9	10	AI TEDS CHRTN (2)
11 12	AI TEDS CHDATA (10)	11	12	AI TEDS CHRTN (10)
13 14	AI TEDS CHDATA (3)	13	14	AI TEDS CHRTN (3)
15 16	AI TEDS CHDATA (11)	15	16	AI TEDS CHRTN (11)
17 18	AI TEDS CHDATA (4)	17	18	AI TEDS CHRTN (4)
19 20	AI TEDS CHDATA (12)	19	20	AI TEDS CHRTN (12)
21 22	AI TEDS CHDATA (5)	21	22	AI TEDS CHRTN (5)
23 24	AI TEDS CHDATA (13)	23	24	AI TEDS CHRTN (13)
25 26	AI TEDS CHDATA (6)	25	26	AI TEDS CHRTN (6)
27 28	AI TEDS CHDATA (14)	27	28	AI TEDS CHRTN (14)
29 30	AI TEDS CHDATA (7)	29	30	AI TEDS CHRTN (7)
31 32	AI TEDS CHDATA (15)	31	32	AI TEDS CHRTN (15)
33 34	AO TEDS CHDATA (0)	33	34	AO TEDS CHRTN (0)
35 36	AO TEDS CHDATA (1)	35	36	AO TEDS CHRTN (1)
37 38	NC	37	38	NC
39 40	NC	39	40	NC
41 42	NC	41	42	NC
43 44	NC	43	44	NC
45 46	NC	45	46	NC
47 48	NC	47	48	NC
NC = No Connect	NC	49	50	NC

C

SCC Power Requirements and Solutions

Installing new SCC modules in the SC-2345/2350 carrier increases the power requirements of the SCC system. Depending on the number and types of modules you are using, the power requirements of an SCC system can eventually exceed the amount of power available from the SCC-PWR module. Copy the following worksheets and use them to recalculate the power requirements of the SCC system when you add new SCC modules. To calculate the analog and digital power requirements for all the SCC modules in each SC-2345/2350 carrier, complete the following steps:

1. Enter the number of modules of each type that you plan to use in Table C-1, *Number of Modules per Carrier*.
2. For each module type, multiply *Number of Modules per Carrier* by *Maximum Analog Power Required (mW)* and enter the product in *Analog Power Required by Module Type*.
3. For each module type, multiply *Number of Modules per Carrier* by *Maximum Digital Power Required (mW)* and enter the product in *Digital Power Required by Module Type*.
4. In Table C-2, total *Analog Power Required by Module Type* and enter the sum as *Total Analog Power Required per Carrier*.
5. In Table C-2, total *Digital Power Required by Module Type* and enter the sum as *Total Digital Power Required per Carrier*.
6. Use Table C-3 and the sections that follow to determine which power option works for your system. The calculated power requirement must be lower than the available power for each power type.

Table C-1. Power Requirements of SCC Modules by Module Type

SCC Module	Maximum Analog Power Required (mW)	Maximum Digital Power Required (mW)	Number of Modules per Carrier	Analog Power Required by Module Type	Digital Power Required by Module Type
SCC-A10	90	0			
SCC-AI*XX*	375	525			
SCC-AO10	180	1150			
SCC-CI20	75	0			
SCC-CO20	175	645			
SCC-CTR01	0	140			
SCC-DI01	0	61			
SCC-DO01	0	70			
SCC-FT01	—	—			
SCC-FV01	60	0			
SCC-ACC01	80	330			
SCC-LP01, SCC-LP02	135	0			
SCC-LP03, SCC-LP04	475	0			
SCC-RLY01	0	300			
SCC-RTD01	135	153			
SCC-SG0*X*	103	115			
SCC-SG11	0	0.1			
SCC-SG24	340	930			
SCC-TC*XX*	60	0			
			Total =		

Table C-2. Total Power Requirements per Carrier

Total Analog Power Required per Carrier	Total Digital Power Required per Carrier	Total Combined Power Required per Carrier

Table C-3. SC-2345/2350 Carrier: Power Available from SCC-PWR Modules

SCC-PWR Module	Maximum Analog Power Available, P_{AMax}	Maximum Digital Power Available, P_{DMax}	Power Available from Power Supply, P_S
PWR01 with AT/PCI/PXI[1]	1.74 W	4.18 W*	5.00 W
PWR01 with DAQCard/DAQPad[2]	0.49 W	0.80 W*	1.25 W
PWR01 with External +5 VDC Supply[3]	1.74 W	6.97 W*	External
PWR02	8.74 W	6.97 W*	N/A
PWR03 with External 7–42 VDC Supply	1.74 W	6.55 W*	External

[1] These power calculations apply to E/M Series DAQ devices that provide +5 VDC at 1 A at the I/O connector. Refer to the specifications for the E/M Series DAQ device. Tests were performed using a 1 m cable. Longer cables yield a lower level of power, but the difference is negligible for cables of 2 m or less in length.

[2] These power calculations apply to E Series DAQ devices that provide +5 VDC at 250 mA at the I/O connector. Refer to the specifications for the E Series DAQ device. Tests were performed using a 1 m cable. Longer cables yield a lower level of power, but the difference is negligible for cables of 2 m or less in length.

[3] Refer to the *Calculating the Power Available from the SCC-PWR01* section.

* Subtract 0.08 W for the SC-2350 carrier due to its TEDS circuitry.

Calculating the Power Available from the SCC-PWR01

To maximize the amount of power available from the SCC-PWR01, use an external +5 VDC power supply with a minimum rating of 10.2 W. Analog power available is limited by the 2 W DC–DC converter on the SC-2345/2350 carrier and cannot exceed 1.74 W.

SC-2345 Carrier

For the SCC-PWR01 to supply enough power for your SCC configuration in the SC-2345 carrier, the following three conditions must be true:

$$P_A \leq P_{AMax}$$

and

$$P_D \leq P_{DMax}$$

and

$$P_A / 0.62 + P_D + 0.45 \text{ W} \leq P_S$$

where

P_A is the total analog power required by your SCC configuration, in watts;

P_{AMax} is the maximum analog power available in watts, from Table C-3;

P_D is the total digital power required by your SCC configuration, in watts;

P_{DMax} is the maximum digital power available in watts, from Table C-3; and

P_S is the rating of the power supply in watts.

SC-2350 Carrier

For the SCC-PWR01 to supply enough power for your SCC configuration in the SC-2350 carrier, the following three conditions must be true:

$$P_A \leq P_{AMax}$$

and

$$P_D \leq P_{DMax}$$

and

$$P_A / 0.62 + P_D + 0.53 \text{ W} \leq P_S$$

where

P_A is the total analog power required by your SCC configuration, in watts;

P_{AMax} is the maximum analog power available in watts, from Table C-3;

P_D is the total digital power required by your SCC configuration, in watts;

P_{DMax} is the maximum digital power available in watts, from Table C-3; and

P_S is the rating of the power supply in watts.

Calculating the Power Available from the SCC-PWR02

The following section discusses the conditions which must be met for the SCC-PWR02 to supply enough power for the SCC configuration on the SC carriers.

SC-2345/2350 Carrier

For the SCC-PWR02 to supply enough power for your SCC configuration on the SC-2345/2350 carrier, the following two conditions must be true:

$$P_A \leq P_{AMax}$$

and

$$P_D \leq P_{DMax}$$

where

P_A is the total analog power required by your SCC configuration, in watts;

P_{AMax} is the maximum analog power available in watts, from Table C-3;

P_D is the total digital power required by your SCC configuration, in watts; and

P_{DMax} is the maximum digital power available in watts, from Table C-3.

Calculating the Power Available from the SCC-PWR03

The following section discusses the conditions which must be met for the SCC-PWR03 to supply power to the SCC configuration on the SC carriers.

SC-2345 Carrier

For the SCC-PWR03 to supply enough power for your SCC configuration in the SC-2345 carrier, the following three conditions must be true:

$$P_A \leq P_{AMax}$$

and

$$P_A / 0.62 + P_D \leq P_{DMax}$$

and

$$P_A / 0.62 + P_D + 0.45 \text{ W} \leq 0.75 P_S$$

where

P_A is the total analog power required by your SCC configuration, in watts;

P_{AMax} is the maximum analog power available in watts, from Table C-3;

P_D is the total digital power required by your SCC configuration, in watts;

P_{DMax} is the maximum digital power available in watts, from Table C-3; and

P_S is the rating of the power supply in watts.

SC-2350 Carrier

For the SCC-PWR03 to supply enough power for your SCC configuration in the SC-2350 carrier, the following three conditions must be true:

$$P_A \leq P_{AMax}$$

and

$$P_A / 0.62 + P_D \leq P_{DMax}$$

and

$$P_A / 0.62 + P_D + 0.53 \text{ W} \leq 0.75 P_S$$

where

P_A is the total analog power required by your SCC configuration, in watts;

P_{AMax} is the maximum analog power available in watts, from Table C-3;

P_D is the total digital power required by your SCC configuration, in watts;

P_{DMax} is the maximum digital power available in watts, from Table C-3; and

P_S is the rating of the power supply in watts.

D

Common Questions

Which power option should I use for my application?

Refer to Appendix C, *SCC Power Requirements and Solutions*, to determine which option to use.

I am sampling a very-low-voltage, noisy signal. How should I condition the signal?

If the signal is within the ±50 mV range, use an SCC-AI07 isolated analog input module. If the signal is of higher amplitude, but still within the ±100 mV range, use an SCC-AI06. Each of these modules has a 10 kHz lowpass filter. The SCC-AI07 applies a gain of 200, and the SCC-AI06 applies a gain of 100.

Why should I amplify a noisy, low-amplitude analog signal using an SCC module? Can't I just amplify it using my E/M Series DAQ device?

One reason to amplify low-level signals close to the signal source instead of at the E/M Series DAQ device is to increase the signal-to-noise ratio. If you use the E/M Series DAQ device to amplify the signal, the E/M Series DAQ device also measures and digitizes any noise that enters the lead wires along the signal path. However, if you amplify the signal closer to the signal source, the ratio of signal voltage to noise voltage that enters the lead wires is larger. Therefore, the noise has a less destructive effect on the signal.

I need to sample a 24 V signal. Which SCC module(s) should I use?

Use an SCC-AI01 isolated analog input module. The SCC-AI01 has an input range of ±42 V and applies a gain of 0.2, yielding a signal of ±8.4 V. This produces a signal within the input range of the E/M Series DAQ device.

I am taking measurements from a strain gage mounted on a motor, and I am concerned that voltages from the motor might damage my E/M Series DAQ device. What can I use for isolation?

In this case, to make an isolated-strain measurement, use two SCC modules.

- Use an isolated analog output module to provide excitation.
- If remote sense is desired, use a third module such as an SCC-AI*XX* module. Use an isolated analog input module with appropriate range to monitor the excitation voltage (remote sense the voltage). For example, use the SCC-AI03 to perform remote sense if you are using 10 V_{EX}. If you are using 5 V_{EX}, use the SCC-AI04 to perform remote sense. Use the remote sense voltage measurements to scale the strain measurements. Use the remote sense configuration option. Refer to the *NI-DAQmx Help*, click **Search**, and enter `remote sense` for more information about remote sensing.
- To measure the return voltage from the strain gage, use the appropriate range isolated analog input module. For example, if the strain gauge returns a ±2 mV signal/V_{EX}, then the maximum signal output is ±20 mV. Use the SCC-AI07, which has a ±50 mV range, and the gain from the E/M Series DAQ device to completely utilize the A/D range and achieve maximum accuracy with isolation. Isolation amplifiers inherently contain noise, therefore NI recommends averaging a buffer of measurements for maximum accuracy. Use the offset adjust screw potentiometer on the SCC-AI07 to perform an offset null.

Which modules should I use for a feedback system? I want to send an AO signal to an external object, read an AI signal from the object, and adjust the AO based on the AI signal. When a certain condition is reached in the AI, I want a DO module to turn on an alarm or LED. Can you tell me how to configure and wire this system?

For the AO, use an SCC-CO20 isolated current output module, or design and build a circuit on the SCC-FT01 that produces the type of output signal you need. Use socket J17 or J18 for the analog output and control the output using AO 0 or AO 1 on the E/M Series DAQ device. Refer to the *SCC-CO20 Isolated Current Output Module User Guide* for instructions on wiring the module to the external circuit. For the AI, the module you use depends on the type of signal you are reading from the external object (circuit). For example, plug an SCC-AI*XX* module into socket J1 and the module sends one signal to AI 0 and one signal to AI 8 on the E/M Series DAQ device. Refer to the *SCC-AI Series Isolated Analog Input Modules User Guide* for instructions on wiring the module to the external circuit. Plug an SCC-DI01 module into socket J9, and it is controlled by

E/M Series DAQ device digital (P0.0) channel. Only the SC-2345 carrier can support a digital module. Use software to associate the channels with one another.

How can I use the SC-2350 carrier to write to the IEEE P1451.4 TEDS-compatible sensor?

Refer to `ni.com/info` and enter info code `rdtntg` for more information about using the SC-2350 carrier with TEDS-compatible sensors.

Where can I find more information about TEDS-compatible sensors?

For more information about TEDS, refer to the following locations:

- SCXI-1314T TEDS Bridge Sensor Terminal Block Installation Guide
- `ni.com/devzone`
- Refer to `ni.com/info`, and enter any of the following info codes:
  - `rd2350`
  - `rdsenr`
  - `rdpnpy`
  - `rdpnsn`
  - `rdtntg`

Glossary

Symbol	Prefix	Value
p	pico	10^{-12}
n	nano	10^{-9}
µ	micro	10^{-6}
m	milli	10^{-3}
k	kilo	10^{3}
M	mega	10^{6}
G	giga	10^{9}
T	tera	10^{12}

Symbols

%	percent
+	positive of, or plus
/	per
°	degree
Ω	ohm

A

A	amperes
AI	analog input channel signal
AI GND	analog input ground signal
AI HOLD COMP	scan clock signal
AI SAMP CLOCK	start clock signal

AI SENSE	analog input sense signal
AO SAMP CLK	update signal
AO GND	analog output ground signal
AT	used in the product names of E Series DAQ devices based on the ISA bus architecture, for example, AT-MIO-16E
AWG	American Wire Gauge

C

C	Celsius
CH	channel
channel	pin or wire lead to which you apply or from which you read the analog or digital signal. Analog signals can be single-ended or differential. For digital signals, you group channels to form ports. Ports usually consist of either four or eight digital channels.
connector block	same as carrier, as in SC-2345/2350 carrier
counter/timer	a circuit that counts external pulses or generates clock pulses (timing)
CTR 0 GATE	general purpose counter/timer 0 gate signal
CTR 0 OUT	general purpose counter/timer 0 output signal
CTR 0 SOURCE	general purpose counter/timer 0 clock source signal
CTR 1 GATE	general purpose counter/timer 1 gate signal
CTR 1 OUT	general purpose counter/timer 1 output signal
CTR 1 SOURCE	general purpose counter/timer 1 clock source signal

D

DAC	digital-to-analog converter—an electronic device, often an integrated circuit, that converts a digital number into a corresponding analog voltage or current
DAQ	data acquisition—(1) collecting and measuring electrical signals from sensors, transducers, and test probes or fixtures and inputting them to a computer for processing; (2) collecting and measuring the same kinds of electrical signals with A/D and/or DIO boards plugged into a computer, and possibly generating control signals with D/A and/or DIO boards in the same computer
DAQ device	a plug-in data acquisition board, card, or pad that can contain multiple channels and conversion devices. Plug-in boards and PCMCIA cards are examples of DAQ devices.
DAQCard	a data acquisition device on a PCMCIA card
DAQPad	a data acquisition device that uses the IEEE 1394 bus architecture
DC	direct current
drop-down listbox	a graphical box with a down arrow button that lets you select values or options from a list. To select a value or option in the selection box, click the down arrow for a complete list values or options, then use your arrow keys or mouse to select a value or option from the list.

E

E Series	a standard architecture for instrumentation-class, multichannel data acquisition devices
EMI	electromagnetic interference
EXT REF	external reference signal
EXTSTROBE	external strobe signal

F

F_c	frequency cutoff
filtering	a type of signal conditioning that allows you to filter unwanted signals from the signal you are trying to measure
FREQ OUT	frequency output signal

G

g	a unit of acceleration equal to 9.80 m/s^2
gain	the factor by which a signal is amplified, sometimes expressed in decibels

H

h	hour
hardware	the physical components of a computer system, such as the circuit boards, plug-in boards, chassis, enclosures, peripherals, cables, and so on
Hz	hertz—the number of scans read or updates written per second

I

I/O	input/output—the transfer of data to/from a computer system involving communications channels, operator interface devices, and/or data acquisition and control interfaces
IEEE P1451	family of IEEE standards defining a variety of smart transducer interfaces. All of the standards within this family support the concept of a TEDS, that provides self-identification and plug and play operation to transducers.
IEEE P1451.4	an IEEE standard that defines the concept of plug-and-play sensors with analog signals. This is accomplished with the addition of a TEDS in memory, typically an EEPROM, embedded within the sensor and communicated through a simple, low-cost serial connection.

K

K	Kelvin

L

LED	light-emitting diode

M

M Series	An architecture for instrumentation-class, multichannel data acquisition devices based on the earlier E Series architecture with added new features.
Maxim/Dallas Semiconductor 1-Wire Protocol	a very simple, low-cost, master-slave serial communication protocol, requiring that a single master device, such as the data acquisition system, supply power and initiate each transaction with each node according to a defined transaction timing sequence, on a single wire and return
measurement	The quantitative determination of a physical characteristic. In practice, measurement is the conversion of a physical quantity or observation to a domain where a human being or computer can determine the value.

N

NI-DAQ	National Instruments driver software for DAQ hardware
noise	an undesirable electrical signal—noise comes from external sources such as the AC power line, motors, generators, transformers, fluorescent lights, soldering irons, CRT displays, computers, electrical storms, welders, radio transmitters, and internal sources such as semiconductors, resistors, and capacitors. Noise corrupts signals you are trying to send or receive.
NRSE	nonreferenced single-ended mode—all measurements are made with respect to a common (NRSE) measurement system reference, but the voltage at this reference can vary with respect to the measurement system ground

P

P_A	analog power
pad	a hole in the PWB used by the customer for signal connection
panelette	small panels fitted with one or more connectors, controls, or indicators
PCI	Peripheral Component Interconnect—a high-performance plug-and-play expansion bus architecture used in some E Series DAQ devices
P_D	digital power
peak to peak	a measure of signal amplitude; the difference between the highest and lowest excursions of the signal
PFI	programmable function input
plug & play sensor	a transducer with an associated TEDS—includes both Virtual TEDS and smart TEDS sensors
P0.	digital input/output
p-p	*See* peak to peak
pp	*peak to peak*
ppm	parts per million
PXI	PCI eXtensions for Instrumentation—a rugged, open system for modular instrumentation based on CompactPCI, with special mechanical, electrical, and software features. *See also* PCI.

R

rms	root mean square—the square root of the average value of the square of the instantaneous signal amplitude; a measure of signal amplitude
RSE	referenced single-ended mode—all measurements are made with respect to a common reference measurement system or a ground. Also called a grounded measurement system.

S

s	seconds
scan	one or more analog or digital input samples. Typically, the number of input samples in a scan is equal to the number of channels in the input group. For example, one pulse from the scan clock produces one scan which acquires one new sample from every analog input channel in the group.
SCC	signal conditioning component
SCC-LP	refers to all versions in the LP series
SCC-PWR	refers to an SCC power module
SCC-TC	refers to both the SCC-TC01 and the SCC-TC02
SCSI	small computer system interface
SE	single-ended—a term used to describe an analog input that is measured with respect to a common ground
sensor	a device that responds to a physical stimulus (heat, light, sound, pressure, motion, flow, and so on), and produces a corresponding electrical signal
signal conditioning	the manipulation of signals to prepare them for digitizing
smart TEDS sensor	a transducer with a built-in self-identification EEPROM that provides the TEDS

T

TEDS	Transducer Electronic Data Sheet—self-identification and calibration information, such as sensor identification information, sensitivity, calibration parameters, location ID, and custom user data, stored in an EEPROM embedded in an analog sensor. For information on IEEE P1451.4 TEDS-compatible smart sensors, refer to `ni.com/zone`.

TEDS Class I sensor — a smart TEDS sensor with a constant-current powered transducer with a two-wire interface such as an accelerometer. Class 1 transducers also include diodes or analog switches with which the multiplexing of the analog signal with the digital TEDS information on the single-pair of wires is possible. The digital portion of the mixed-mode interface (Class 1 or Class 2) is based on the 1-Wire protocol from Maxim/Dallas Semiconductor

TEDS Class II sensor — a smart TEDS sensor with separate wires for the analog and digital portions of the TEDS mixed-mode interface. The analog input/output of the transducer is left unmodified, and the digital TEDS circuit is added in parallel, such as thermocouples, RTDs and bridge-based sensors. The digital portion of the mixed-mode interface (Class 1 or Class 2) is based on the 1-Wire protocol from Maxim/Dallas Semiconductor.

For more information, refer to *Maxim/Dallas Semiconductor 1-Wire Protocol*.

thermocouple — a temperature sensor created by joining two dissimilar metals. The junction produces a small voltage as a function of the temperature.

threshold — a reference voltage, that when compared to another voltage, triggers an event

TRIG — trigger signal

V

V — volts

V_{COM} — voltage input signal reference

V_{DC} — volts direct current

V_{IN} — voltage input signal

virtual TEDS — Transducer Electronic Data Sheet, not directly built into the transducer itself, but accessible through a computer file, which has been downloaded from the internet or created locally

V_{SS} — voltage supply signal

W

W	watts
working voltage	the highest voltage that should be applied to a product during normal use, normally well under the breakdown voltage for safety margin

Index

A

analog input, 1-2, 1-6, 1-9, A-1, A-7, B-2, D-1, D-2, G-1
analog output, D-2

C

configuration and connectivity
    terminal-block signal connections, 2-1
conventions used in the manual, *v*

D

documentation, conventions used in the manual, *v*
drivers, software, 1-3

I

I/O connector pins
    pin signal connections, B-1
        table, B-2
IEEE 1451.4, 1-9, 1-10
IEEE P1451.4, 1-10
info codes, 1-10
installation
    SCC into SC-2345 with configurable connectors
        mounting options, 2-2
        rack-mount option (figure), 2-3
        stack-mount option (figure), 2-4
isolated analog input, D-1

M

mounting options, 2-2
    rack-mount option (figure), 2-3
    stack-mount option (figure), 2-4

N

ni.com
    downloads, 1-3
    info, 1-10
NI-DAQ software, 1-3

P

panelette, 1-1, 1-2, 1-17, 1-19, A-4, A-9
pin assignments, SC-2345 terminal block (figure), 2-2
pin signal connections (table), B-2
power modules, 1-2, 1-15
    SCC-PWR01, 1-15, 1-17, A-12
    SCC-PWR02, 1-15, 1-18, A-13
    SCC-PWR03, 1-15, 1-19, A-14
power requirements
    calculating, C-1
    specifications, A-2, A-7

Q

quick reference label, 1-3, 1-15, 2-1

R

rack mounting, 1-2, 2-2
requirements for getting started, 1-2

S

SCC modules
    SCC power requirements and solutions, C-1
    SCC socket configuration and color codes (figure), 2-1

SCC-PWR power modules
parts locator diagram, 1-15
SCC-PWR01
overview, 1-17
specifications, A-12
SCC-PWR02
overview, 1-18
specifications, A-14
SCC-PWR03
overview, 1-19
specifications, A-14
signal connections
terminal-block signal connections, 2-1
specifications
SC-2345, A-1
SC-2350, A-7
SCC PWR power modules
SCC-PWR01, A-12
SCC-PWR02, A-13
SCC-PWR03, A-14

T

TEDS, 1-2, 1-10, 1-13, 1-14
Class I, 1-9
Class II, 1-9
terminal block
input/output
connector pin assignments,
connector pin assignments,
input/output, 2-2
terminal-block signal connections
pin assignments (figure), 2-2

V

virtual TEDS, 1-10

W

Web, National Instruments, 1-3