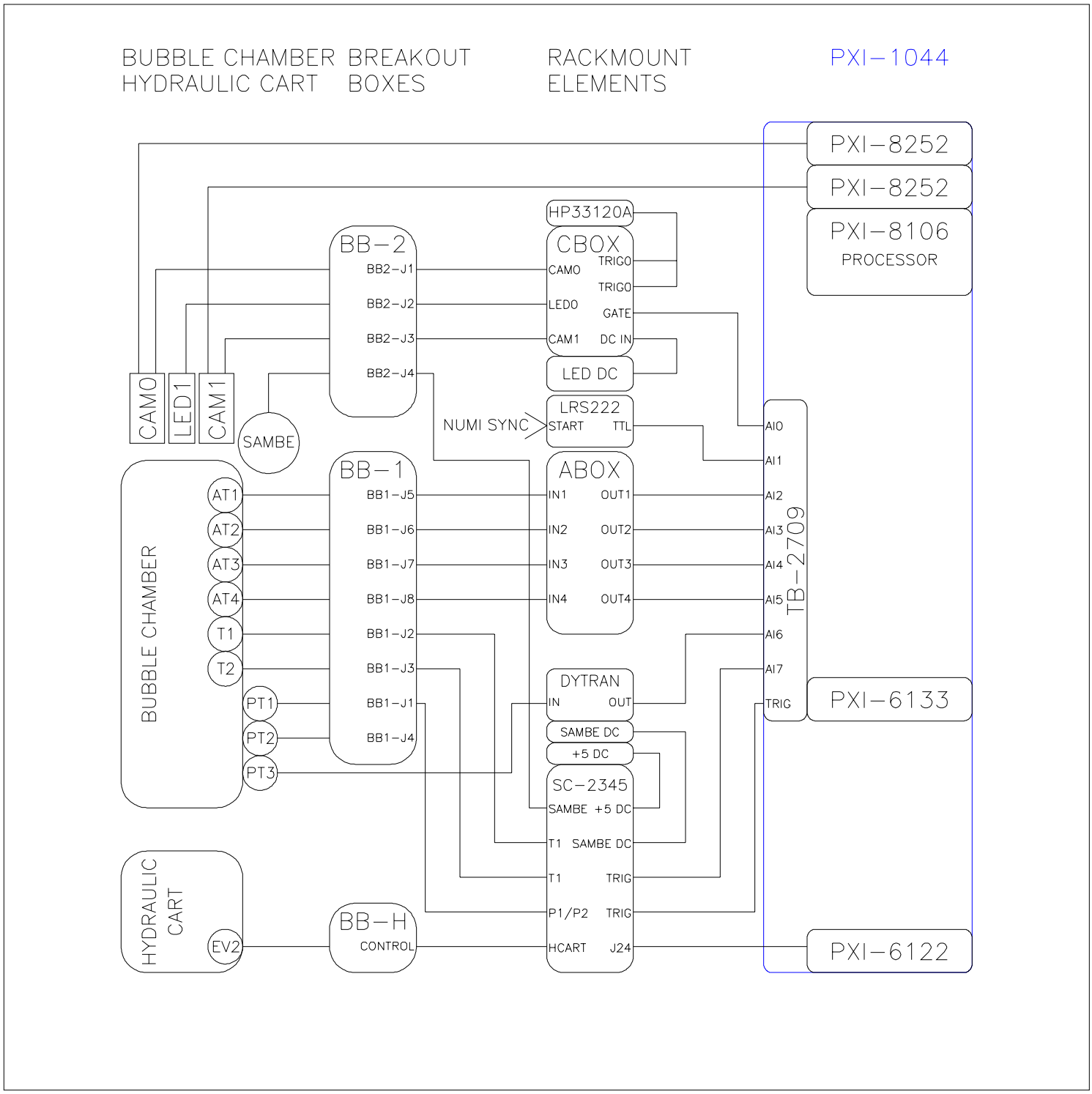
BUBBLE CHAMBER HYDRAULIC CART
BREAKOUT BOXES
RACKMOUNT ELEMENTS
PXI-1044
PXI-8252
PXI-8252
PXI-8106
PROCESSOR
HP33120A
CBOX
CAMO
TRIGO
TRIGO
LEDO
GATE
CAM1
DC IN
LED DC
BB-2
BB2-J1
BB2-J2
BB2-J3
BB2-J4
CAMO
LED1
CAM1
SAMBE
NUMI SYNC
LRS222
START
TTL
BB-1
BB1-J5
BB1-J6
BB1-J7
BB1-J8
BB1-J2
BB1-J3
BB1-J1
BB1-J4
ABOX
IN1
OUT1
IN2
OUT2
IN3
OUT3
IN4
OUT4
BUBBLE CHAMBER
AT1
AT2
AT3
AT4
T1
T2
PT1
PT2
PT3
TB-2709
AI0
AI1
AI2
AI3
AI4
AI5
AI6
AI7
TRIG
PXI-6133
DYTRAN
IN
OUT
SAMBE DC
+5 DC
SC-2345
SAMBE
+5 DC
T1
SAMBE DC
T1
TRIG
P1/P2
TRIG
HCART
J24
HYDRAULIC CART
EV2
BB-H
CONTROL
PXI-6122