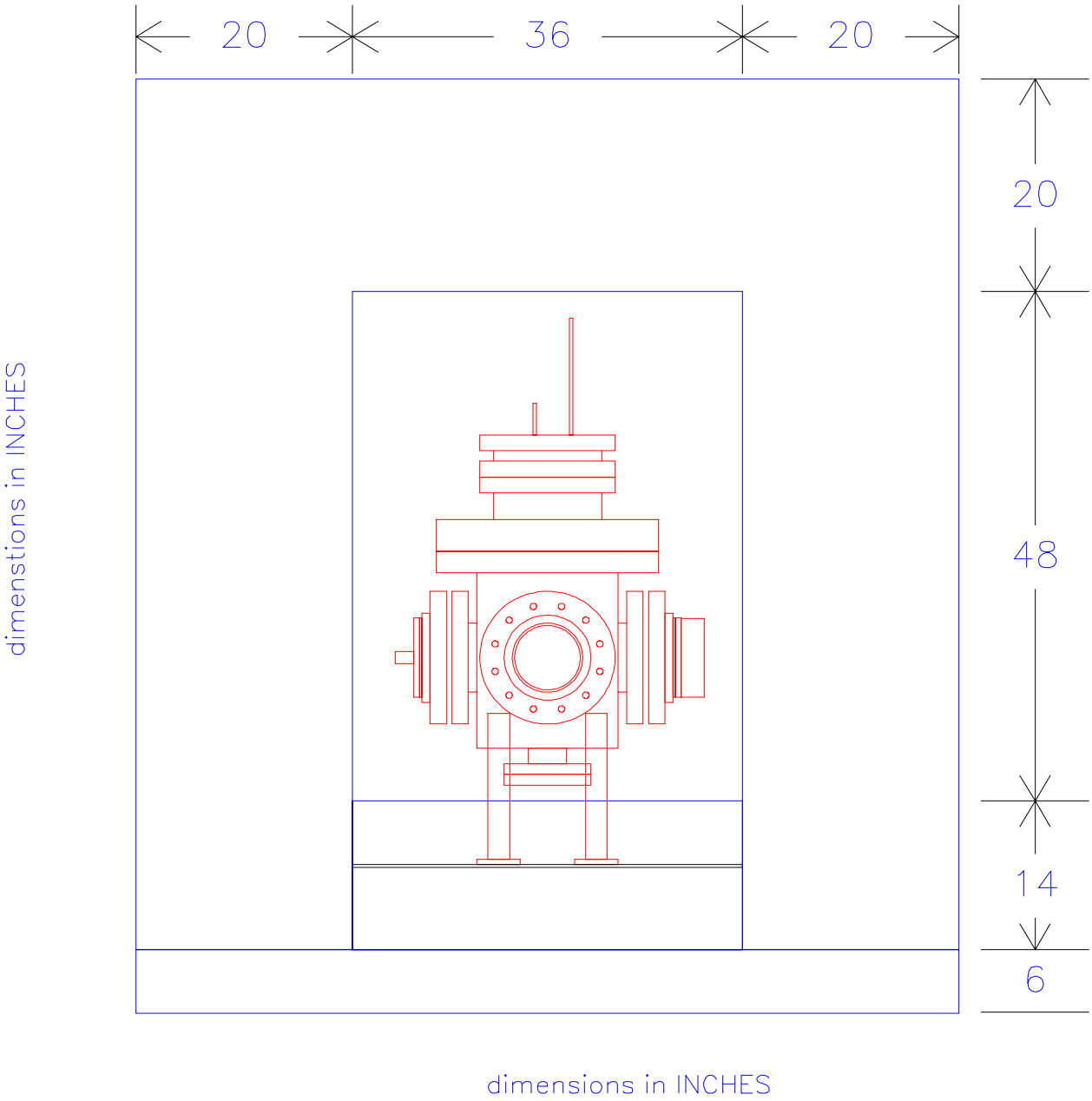
20
36
20
20
48
14
6
dimenstions in INCHES
dimensions in INCHES