PXI

NI PXI-8106 User Manual

January 2007
372096A-01

NATIONAL INSTRUMENTS™

Worldwide Technical Support and Product Information

ni.com

National Instruments Corporate Headquarters

11500 North Mopac Expressway Austin, Texas 78759-3504 USA Tel: 512 683 0100

Worldwide Offices

Australia 1800 300 800, Austria 43 0 662 45 79 90 0, Belgium 32 0 2 757 00 20, Brazil 55 11 3262 3599, Canada 800 433 3488, China 86 21 6555 7838, Czech Republic 420 224 235 774, Denmark 45 45 76 26 00, Finland 385 0 9 725 725 11, France 33 0 1 48 14 24 24, Germany 49 0 89 741 31 30, India 91 80 41190000, Israel 972 0 3 6393737, Italy 39 02 413091, Japan 81 3 5472 2970, Korea 82 02 3451 3400, Lebanon 961 0 1 33 28 28, Malaysia 1800 887710, Mexico 01 800 010 0793, Netherlands 31 0 348 433 466, New Zealand 0800 553 322, Norway 47 0 66 90 76 60, Poland 48 22 3390150, Portugal 351 210 311 210, Russia 7 495 783 68 51, Singapore 1800 226 5886, Slovenia 386 3 425 42 00, South Africa 27 0 11 805 8197, Spain 34 91 640 0085, Sweden 46 0 8 587 895 00, Switzerland 41 56 200 51 51, Taiwan 886 02 2377 2222, Thailand 662 278 6777, United Kingdom 44 0 1635 523545

For further support information, refer to the *Technical Support and Professional Services* appendix. To comment on National Instruments documentation, refer to the National Instruments Web site at ni.com/info and enter the info code feedback.

© 2007 National Instruments Corporation. All rights reserved.

Important Information

Warranty

The PXI-8106 is warranted against defects in materials and workmanship for a period of one year from the date of shipment, as evidenced by receipts or other documentation. National Instruments will, at its option, repair or replace equipment that proves to be defective during the warranty period. This warranty includes parts and labor.

The media on which you receive National Instruments software are warranted not to fail to execute programming instructions, due to defects in materials and workmanship, for a period of 90 days from date of shipment, as evidenced by receipts or other documentation. National Instruments will, at its option, repair or replace software media that do not execute programming instructions if National Instruments receives notice of such defects during the warranty period. National Instruments does not warrant that the operation of the software shall be uninterrupted or error free.

A Return Material Authorization (RMA) number must be obtained from the factory and clearly marked on the outside of the package before any equipment will be accepted for warranty work. National Instruments will pay the shipping costs of returning to the owner parts which are covered by warranty.

National Instruments believes that the information in this document is accurate. The document has been carefully reviewed for technical accuracy. In the event that technical or typographical errors exist, National Instruments reserves the right to make changes to subsequent editions of this document without prior notice to holders of this edition. The reader should consult National Instruments if errors are suspected. In no event shall National Instruments be liable for any damages arising out of or related to this document or the information contained in it.

EXCEPT AS SPECIFIED HEREIN, NATIONAL INSTRUMENTS MAKES NO WARRANTIES, EXPRESS OR IMPLIED, AND SPECIFICALLY DISCLAIMS ANY WARRANTY OF MERCHANTABILITY OR FITNESS FOR A PARTICULAR PURPOSE. CUSTOMER'S RIGHT TO RECOVER DAMAGES CAUSED BY FAULT OR NEGLIGENCE ON THE PART OF NATIONAL INSTRUMENTS SHALL BE LIMITED TO THE AMOUNT THERETOFORE PAID BY THE CUSTOMER. NATIONAL INSTRUMENTS WILL NOT BE LIABLE FOR DAMAGES RESULTING FROM LOSS OF DATA, PROFITS, USE OF PRODUCTS, OR INCIDENTAL OR CONSEQUENTIAL DAMAGES, EVEN IF ADVISED OF THE POSSIBILITY THEREOF. This limitation of the liability of National Instruments will apply regardless of the form of action, whether in contract or tort, including negligence. Any action against National Instruments must be brought within one year after the cause of action accrues. National Instruments shall not be liable for any delay in performance due to causes beyond its reasonable control. The warranty provided herein does not cover damages, defects, malfunctions, or service failures caused by owner's failure to follow the National Instruments installation, operation, or maintenance instructions; owner's modification of the product; owner's abuse, misuse, or negligent acts; and power failure or surges, fire, flood, accident, actions of third parties, or other events outside reasonable control.

Copyright

Under the copyright laws, this publication may not be reproduced or transmitted in any form, electronic or mechanical, including photocopying, recording, storing in an information retrieval system, or translating, in whole or in part, without the prior written consent of National Instruments Corporation.

National Instruments respects the intellectual property of others, and we ask our users to do the same. NI software is protected by copyright and other intellectual property laws. Where NI software may be used to reproduce software or other materials belonging to others, you may use NI software only to reproduce materials that you may reproduce in accordance with the terms of any applicable license or other legal restriction.

Trademarks

National Instruments, NI, ni.com, and LabVIEW are trademarks of National Instruments Corporation. Refer to the *Terms of Use* section on `ni.com/legal` for more information about National Instruments trademarks.

Other product and company names mentioned herein are trademarks or trade names of their respective companies.

Members of the National Instruments Alliance Partner Program are business entities independent from National Instruments and have no agency, partnership, or joint-venture relationship with National Instruments.

Patents

For patents covering National Instruments products, refer to the appropriate location: **Help»Patents** in your software, the `patents.txt` file on your CD, or `ni.com/patents`.

WARNING REGARDING USE OF NATIONAL INSTRUMENTS PRODUCTS

(1) NATIONAL INSTRUMENTS PRODUCTS ARE NOT DESIGNED WITH COMPONENTS AND TESTING FOR A LEVEL OF RELIABILITY SUITABLE FOR USE IN OR IN CONNECTION WITH SURGICAL IMPLANTS OR AS CRITICAL COMPONENTS IN ANY LIFE SUPPORT SYSTEMS WHOSE FAILURE TO PERFORM CAN REASONABLY BE EXPECTED TO CAUSE SIGNIFICANT INJURY TO A HUMAN.

(2) IN ANY APPLICATION, INCLUDING THE ABOVE, RELIABILITY OF OPERATION OF THE SOFTWARE PRODUCTS CAN BE IMPAIRED BY ADVERSE FACTORS, INCLUDING BUT NOT LIMITED TO FLUCTUATIONS IN ELECTRICAL POWER SUPPLY, COMPUTER HARDWARE MALFUNCTIONS, COMPUTER OPERATING SYSTEM SOFTWARE FITNESS, FITNESS OF COMPILERS AND DEVELOPMENT SOFTWARE USED TO DEVELOP AN APPLICATION, INSTALLATION ERRORS, SOFTWARE AND HARDWARE COMPATIBILITY PROBLEMS, MALFUNCTIONS OR FAILURES OF ELECTRONIC MONITORING OR CONTROL DEVICES, TRANSIENT FAILURES OF ELECTRONIC SYSTEMS (HARDWARE AND/OR SOFTWARE), UNANTICIPATED USES OR MISUSES, OR ERRORS ON THE PART OF THE USER OR APPLICATIONS DESIGNER (ADVERSE FACTORS SUCH AS THESE ARE HEREAFTER COLLECTIVELY TERMED "SYSTEM FAILURES"). ANY APPLICATION WHERE A SYSTEM FAILURE WOULD CREATE A RISK OF HARM TO PROPERTY OR PERSONS (INCLUDING THE RISK OF BODILY INJURY AND DEATH) SHOULD NOT BE RELIANT SOLELY UPON ONE FORM OF ELECTRONIC SYSTEM DUE TO THE RISK OF SYSTEM FAILURE. TO AVOID DAMAGE, INJURY, OR DEATH, THE USER OR APPLICATION DESIGNER MUST TAKE REASONABLY PRUDENT STEPS TO PROTECT AGAINST SYSTEM FAILURES, INCLUDING BUT NOT LIMITED TO BACK-UP OR SHUT DOWN MECHANISMS. BECAUSE EACH END-USER SYSTEM IS CUSTOMIZED AND DIFFERS FROM NATIONAL INSTRUMENTS' TESTING PLATFORMS AND BECAUSE A USER OR APPLICATION DESIGNER MAY USE NATIONAL INSTRUMENTS PRODUCTS IN COMBINATION WITH OTHER PRODUCTS IN A MANNER NOT EVALUATED OR CONTEMPLATED BY NATIONAL INSTRUMENTS, THE USER OR APPLICATION DESIGNER IS ULTIMATELY RESPONSIBLE FOR VERIFYING AND VALIDATING THE SUITABILITY OF NATIONAL INSTRUMENTS PRODUCTS WHENEVER NATIONAL INSTRUMENTS PRODUCTS ARE INCORPORATED IN A SYSTEM OR APPLICATION, INCLUDING, WITHOUT LIMITATION, THE APPROPRIATE DESIGN, PROCESS AND SAFETY LEVEL OF SUCH SYSTEM OR APPLICATION.

Compliance

Compliance with FCC/Canada Radio Frequency Interference Regulations

Determining FCC Class

The Federal Communications Commission (FCC) has rules to protect wireless communications from interference. The FCC places digital electronics into two classes. These classes are known as Class A (for use in industrial-commercial locations only) or Class B (for use in residential or commercial locations). All National Instruments (NI) products are FCC Class A products.

Depending on where it is operated, this Class A product could be subject to restrictions in the FCC rules. (In Canada, the Department of Communications (DOC), of Industry Canada, regulates wireless interference in much the same way.) Digital electronics emit weak signals during normal operation that can affect radio, television, or other wireless products.

All Class A products display a simple warning statement of one paragraph in length regarding interference and undesired operation. The FCC rules have restrictions regarding the locations where FCC Class A products can be operated.

Consult the FCC Web site at `www.fcc.gov` for more information.

FCC/DOC Warnings

This equipment generates and uses radio frequency energy and, if not installed and used in strict accordance with the instructions in this manual and the CE marking Declaration of Conformity*, may cause interference to radio and television reception. Classification requirements are the same for the Federal Communications Commission (FCC) and the Canadian Department of Communications (DOC).

Changes or modifications not expressly approved by NI could void the user's authority to operate the equipment under the FCC Rules.

Class A

Federal Communications Commission

This equipment has been tested and found to comply with the limits for a Class A digital device, pursuant to part 15 of the FCC Rules. These limits are designed to provide reasonable protection against harmful interference when the equipment is operated in a commercial environment. This equipment generates, uses, and can radiate radio frequency energy and, if not installed and used in accordance with the instruction manual, may cause harmful interference to radio communications. Operation of this equipment in a residential area is likely to cause harmful interference in which case the user is required to correct the interference at their own expense.

Canadian Department of Communications

This Class A digital apparatus meets all requirements of the Canadian Interference-Causing Equipment Regulations.

Cet appareil numérique de la classe A respecte toutes les exigences du Règlement sur le matériel brouilleur du Canada.

Compliance with EU Directives

Users in the European Union (EU) should refer to the Declaration of Conformity (DoC) for information* pertaining to the CE marking. Refer to the Declaration of Conformity (DoC) for this product for any additional regulatory compliance information. To obtain the DoC for this product, visit `ni.com/certification`, search by model number or product line, and click the appropriate link in the Certification column.

* The CE marking Declaration of Conformity contains important supplementary information and instructions for the user or installer.

Contents

About This Manual

How to Use the Documentation Set vii
Conventions vii
Related Documentation viii

Chapter 1
Introduction

Benefits of PXI 1-1
NI PXI-8106 1-2
Description 1-2
Functional Overview 1-2
National Instruments Software 1-4

Chapter 2
Installation and Configuration

Installing the NI PXI-8106 2-1
How to Remove the Controller from the PXI Chassis 2-4
BIOS Setup 2-5
Entering BIOS Setup 2-5
Main Setup Menu 2-6
Advanced Setup Menu 2-6
PXI Setup Menu 2-10
LabVIEW RT Options Setup Menu 2-10
Security Menu 2-11
Boot Setup Menu 2-12
Exiting BIOS Setup 2-12
System CMOS 2-13
LabVIEW RT Configuration Switches 2-14
Drivers and Software 2-16
Files and Directories Installed on Your Hard Drive 2-16
PXI Features 2-16
PXI Trigger Connectivity 2-16
Chassis Configuration 2-17
Basic PXI System Configuration 2-18
Upgrading RAM 2-19
Hard Drive Recovery 2-20
Installing an OS 2-21
Installing from a CD-ROM 2-21

ExpressCard 2-21
Installing an ExpressCard 2-21
Removing an ExpressCard 2-22

Chapter 3
I/O Information

Front Panel Connectors 3-1
Front Panel 3-2
DVI-I 3-3
COM1 3-5
Ethernet 3-6
Parallel Port 3-7
Universal Serial Bus 3-9
Trigger 3-10
GPIB (IEEE 488.2) 3-11
ExpressCard/34 Slot 3-12
Front Panel Features 3-14
Data Storage 3-14

Chapter 4
Common Configuration Questions

General Questions 4-1
Boot Options 4-1
Cables and Connections 4-2
Software Driver Installation 4-3
Upgrade Information 4-4
PXI Configuration 4-6

Chapter 5
Troubleshooting

Appendix A
Specifications

Appendix B
Technical Support and Professional Services

Glossary

Index

About This Manual

This manual contains detailed instructions for installing and configuring your National Instruments NI PXI-8106 embedded controller kit.

How to Use the Documentation Set

Begin by reading the *NI PXI-8106 Installation Guide*, a brief quick-start guide that describes how to install and get started with your controller.

This manual, the *NI PXI-8106 User Manual*, contains more details about changing the installation or configuration from the defaults and using the hardware.

Conventions

The following conventions appear in this manual:

» The **»** symbol leads you through nested menu items and dialog box options to a final action. The sequence **File»Page Setup»Options** directs you to pull down the **File** menu, select the **Page Setup** item, and select **Options** from the last dialog box.

This icon denotes a note, which alerts you to important information.

This icon denotes a caution, which advises you of precautions to take to avoid injury, data loss, or a system crash.

bold Bold text denotes items that you must select or click in the software, such as menu items and dialog box options. Bold text also denotes parameter names.

italic Italic text denotes variables, emphasis, a cross-reference, or an introduction to a key concept. Italic text also denotes text that is a placeholder for a word or value that you must supply.

`monospace` Text in this font denotes text or characters that you should enter from the keyboard, sections of code, programming examples, and syntax examples. This font is also used for the proper names of disk drives, paths, directories, programs, subprograms, subroutines, device names, functions, operations, variables, filenames, and extensions.

monospace bold Bold text in this font denotes the messages and responses that the computer automatically prints to the screen. This font also emphasizes lines of code that are different from the other examples.

Related Documentation

The following documents contain information you may find helpful as you read this manual:

- *PICMG 2.0 R3.0 CompactPCI Specification*, PCI Industrial Computers Manufacturers Group
- IEEE Standard P1284.1-1997 *(C/MM) Standard for Information Technology for Transport Independent Printer/System Interface*
- *PCI Local Bus Specification*, Revision 2.3, PCI Special Interest Group
- *PXI Hardware Specification*, Revision 2.2, PXI Systems Alliance
- *PXI Software Specification*, Revision 2.1, PXI Systems Alliance
- *Serialized IRQ Support for PCI Systems Specification*, Revision 6.0, Compaq Computer et al.
- *ExpressCard* Standard, Release 1.0, PCMCIA
- *Universal Serial Bus (USB) Specification*, Revision 2.0
- *Digital Visual Interface (DVI) Specification*, Revision 1.0
- *IEEE Std 488.1-2003, IEEE Standard for Higher Performance Protocol for the Standard Digital Interface for Programmable Instrumentation*

1

Introduction

Benefits of PXI

The PXI (PCI eXtensions for Instrumentation) industry standard, an open specification governed by the PXI Systems Alliance (PXISA), defines a compact modular PC platform for test, measurement, and control systems. PXI leverages the PCI bus, which is the *de facto* standard for today's desktop computer software and hardware designs. As a result, PXI users receive all the benefits of PCI within an architecture that supports mechanical, electrical, and software features tailored to industrial instrumentation, data acquisition, industrial automation, and control applications.

Well-suited for industrial applications, PXI leverages from the CompactPCI specification, which defines a rugged form factor for PCI that offers superior mechanical integrity and easy installation and removal of hardware components. PXI products offer higher and more carefully defined levels of environmental performance required by the vibration, shock, temperature, and humidity extremes of industrial environments. PXI adds mandatory environmental testing and active cooling to the CompactPCI mechanical specification to ease system integration and ensure multivendor interoperability.

Additionally, PXI meets the more specific needs of instrumentation users by adding an integrated trigger bus and reference clock for multiple-board synchronization, a star trigger bus for very precise timing, and local buses for side-band communication between adjacent peripherals.

NI PXI-8106

Description

The NI PXI-8106 PXI/CompactPCI embedded computer is a high-performance PXI/CompactPCI system controller. The NI PXI-8106 controller integrates standard I/O features in a single unit by using state-of-the-art packaging. Combining an NI PXI-8106 embedded controller with a PXI-compatible chassis, such as the NI PXI-1042, results in a fully PC-compatible computer in a compact, rugged package.

Note The NI PXI-8106 controller will not function in the NI PXI-1020 or NI PXI-1025 chassis.

Caution ESD: An electrostatic discharge event to the ExpressCard port may cause the controller to restart. This is an Electromagnetic Compatibility Performance Criteria C (non-continuous operation) for ESD.

The standard I/O on each module includes DVI-I (Digital Video Interface Integrated Analog/Digital) video, one RS-232 serial port, a parallel port, four Hi-Speed USB ports, Gigabit Ethernet, a reset button, and a PXI trigger.

The NI PXI-8106 has an Intel® Core 2™ Duo processor T7400 (2.16 GHz dual core processor), all the standard I/O, and a 30 GB (or larger) hard drive. It also has a PCI-based GPIB controller and an ExpressCard/34 expansion slot.

Functional Overview

This section contains functional descriptions of each major logic block on the NI PXI-8106 embedded computer.

NI PXI-8106 Functional Description

The NI PXI-8106 is a modular PC in a PXI 3U-size form factor. Figure 1-1 is a functional block diagram of the NI PXI-8106. Following the diagram is a description of each logic block shown.

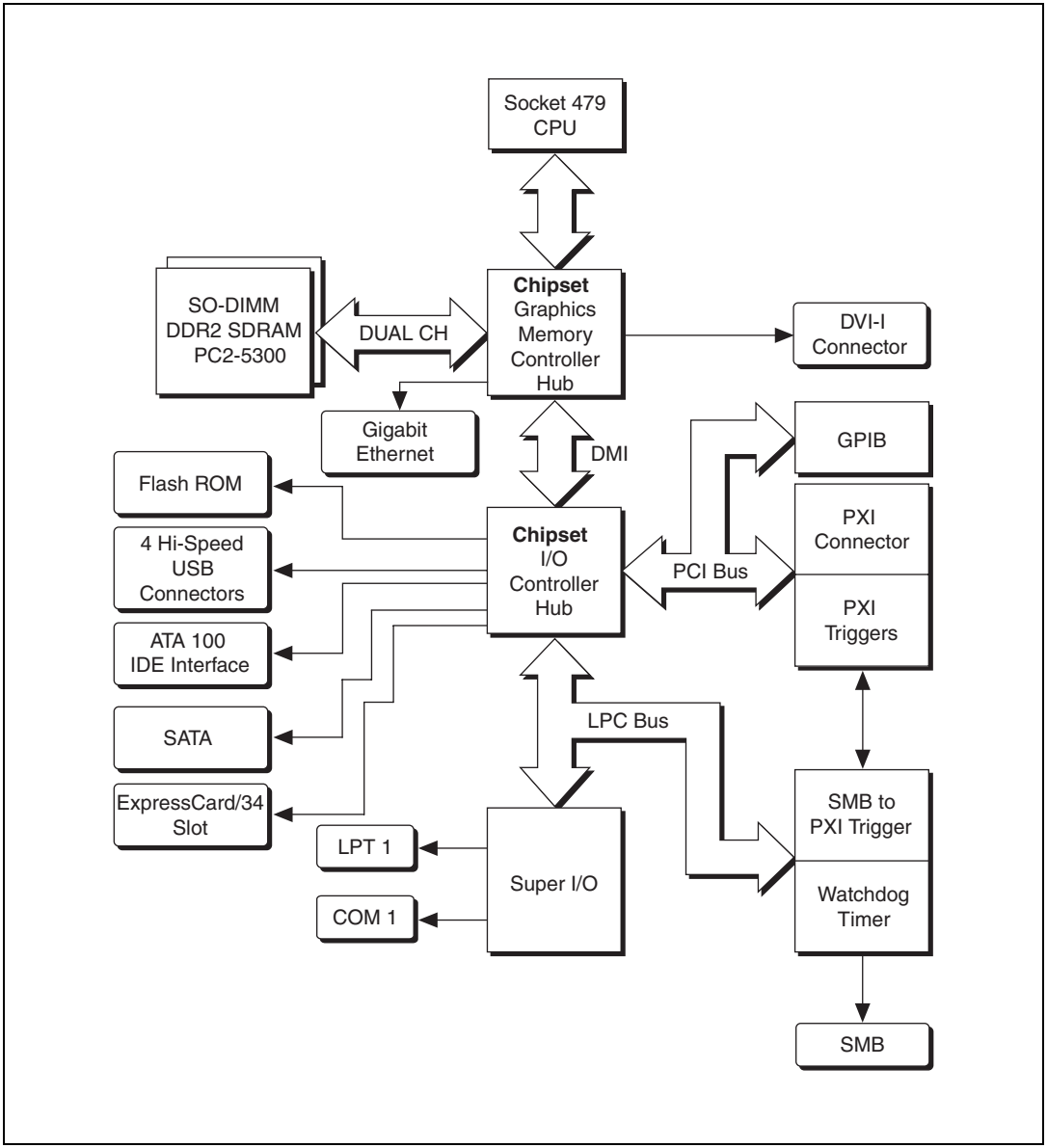

Figure 1-1. NI PXI-8106 Block Diagram

The NI PXI-8106 consists of the following logic blocks on the CPU module and the I/O module. The CPU module has the following logic blocks:

- *Socket 479 CPU* is the socket definition for the Intel® Core 2™ Duo processor T7400.
- The *SO-DIMM* block consists of two 64-bit DDR2 SDRAM sockets that can hold up to 1 GB each.
- The *Chipset 945GMCH* (Graphics and Memory Controller Hub) connects to the CPU, DDR2 SDRAM, and DVI-I video.
- The *SMB to PXI Trigger* provides a routable connection of the PXI triggers to/from the SMB on the front panel.
- The *Watchdog Timer* block consists of a watchdog timer that can reset the controller or generate a trigger.
- The *Chipset ICH7M* connects to the PCI, USB, IDE, SATA, and LPC buses.
- The *USB Connectors* are connected to the ICH7M chipset.
- The *PXI Connector* connects the NI PXI-8106 to the PXI/CompactPCI backplane.
- The *Super I/O* block represents the other peripherals supplied by the NI PXI-8106. The NI PXI-8106 has one serial port, and an ECP/EPP parallel port.
- The *Gigabit Ethernet* connects to either 10 Mbit, 100 Mbit, or 1,000 Mbit Ethernet interfaces.
- The *GPIB* block contains the GPIB interface.
- The *ExpressCard/34* slot accommodates an ExpressCard/34 module.
- The *SATA* block connects a Serial ATA hard drive to the ICH7M.
- The *ATA-100 IDE* block is dedicated PCI-IDE circuitry providing fast ATA-100 transfers to the internal 2.5 in. hard drive. The IDE feature is built into the chipset. The hard drive is 30 GB or larger.

National Instruments Software

National Instruments has developed several software tools you can use with the NI PXI-8106.

National Instruments' hardware and software work together to help you make the most of your PXI system. The LabVIEW, Measurement Studio, and LabWindows™/CVI™ application development environments combine with leading hardware drivers such as NI-DAQmx to provide exceptional

control of NI hardware. Instrument drivers are available at `ni.com/idnet` to simplify communication with instruments over a variety of busses.

LabVIEW is a powerful and easy-to-use graphical programming environment you can use to acquire data from thousands of different instruments including USB, IEEE 488.2, VXI, serial, PLCs, and plug-in boards. LabVIEW helps you convert acquired data into meaningful results using powerful data analysis routines. Add-on tools provide additional specialized functionality. For more information visit `ni.com/labview` and `ni.com/toolkits`.

If you prefer to use Microsoft's Visual Basic, Visual C++, and Visual Studio .NET for the core of your application, Measurement Studio adds tools for Measurement and Automation to each language. For more information visit `ni.com/mstudio`.

LabWindows/CVI is an interactive ANSI C programming environment designed for building virtual instrument applications. LabWindows/CVI delivers a drag-and-drop editor for building user interfaces, a complete ANSI C environment for building your test program logic, and a collection of automated code generation tools, as well as utilities for building automated test systems, monitoring applications, or laboratory experiments. For more information visit `ni.com/lwcvi`.

NI-DAQmx provides an extensive library of functions that you can call from your application development environment or interactive environment such as NI Signal Express. These functions provide an intuitive API for National Instruments' multifunction DAQ products. Features available include analog input (A/D conversion), buffered data acquisition (high-speed A/D conversion), analog output (D/A conversion), waveform generation, digital I/O, counter/timer operations, SCXI signal conditioning, RTSI or PXI synchronization, self-calibration, messaging, and acquiring data to extended memory. For more information visit `ni.com/daq`.

National Instruments' Modular Instruments use specialized drivers suited to each product's specialization. Express VIs provide customized, interactive programming of instruments in a single interface and soft front panels provide an interface for testing the functionality of each instrument with no programming required. NI Switches, DMMs, High-Speed DIO, High-Speed Digitizers, and Sources each have customized drivers for high-end modular instrumentation systems. RF applications leverage two drivers, NI-RFSG and NI-RFSA and Dynamic Signal Acquisition is available through NI-DAQmx. For more information visit `ni.com/modularinstruments`.

You can expand the timing and triggering functionality of your PXI system with PXI Timing and Synchronization products. These products provide precision clock sources, custom routing of triggers for multi-chassis synchronization, clock sharing, and more and are programmed with NI-Sync. For more information visit `ni.com/pxi`.

NI-VISA is the National Instruments implementation of the VISA specification. VISA is a uniform API for communicating and controlling USB, Serial, GPIB, PXI, VXI, and various other types of instruments. This API aids in the creation of portable applications and instrument drivers. For information on writing your own PXI instrument driver with NI-VISA, refer to the *NI-VISA Getting Started Manual* and the `readme.txt` file in the NI-VISA directory. For more information visit `ni.com/visa`.

With LabVIEW for Linux and support for over two hundred devices on Linux with the NI-DAQmx driver, you can now create Virtual Instruments based on the Linux OS. Instrument control in Linux has been improved by the NI-VISA driver for Linux and NI Modular Instruments are partially supported. For more information visit `ni.com/linux`.

2

Installation and Configuration

This chapter contains information about installing and configuring your NI PXI-8106 controller.

Installing the NI PXI-8106

This section contains general installation instructions for the NI PXI-8106. Consult your PXI chassis user manual for specific instructions and warnings.

1. Plug in your chassis before installing the NI PXI-8106. The power cord grounds the chassis and protects it from electrical damage while you install the module. (Make sure the power switch is turned off.)

Caution To protect both yourself and the chassis from electrical hazards, leave the chassis powered off until you finish installing the NI PXI-8106 module.

2. Remove any filler panels blocking access to the system controller slot (Slot 1) in the chassis.
3. Touch the metal part of the case to discharge any static electricity that might be on your clothes or body.

4. Remove the protective plastic covers from the four bracket-retaining screws as shown in Figure 2-1.

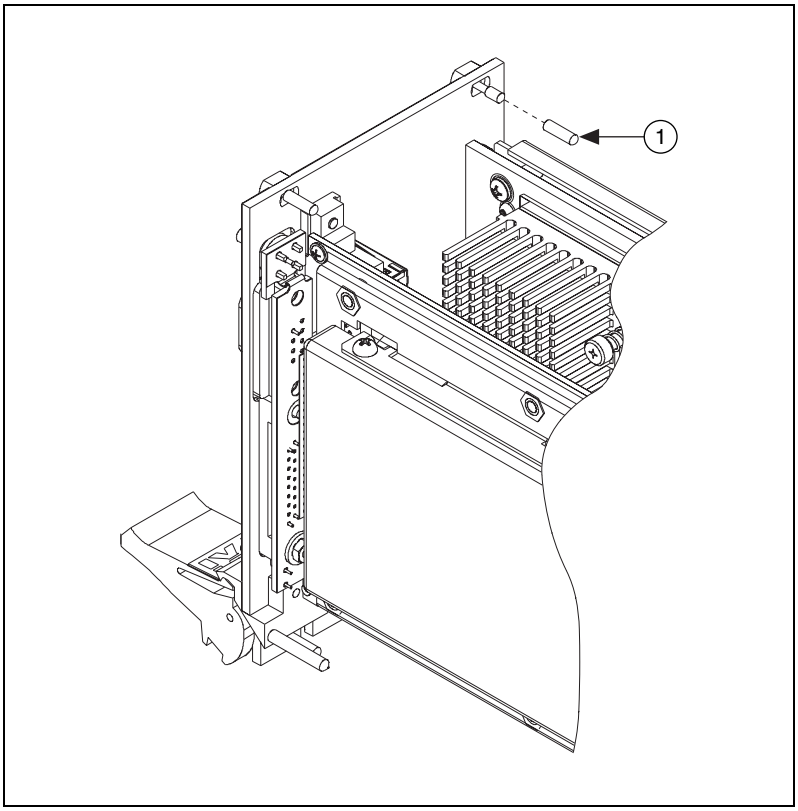

1 Protective Screw Cap (4X)

Figure 2-1. Removing Protective Screw Caps

5. Make sure the injector/ejector handle is in its downward position. Align the NI PXI-8106 with the card guides on the top and bottom of the system controller slot.

Caution Do *not* raise the injector/ejector handle as you insert the NI PXI-8106. The module will not insert properly unless the handle is in its downward position so that it does not interfere with the injector rail on the chassis.

6. Hold the handle as you slowly slide the module into the chassis until the handle catches on the injector/ejector rail.

7. Raise the injector/ejector handle until the module firmly seats into the backplane receptacle connectors. The front panel of the NI PXI-8106 should be even with the front panel of the chassis.
8. Tighten the four bracket-retaining screws on the top and bottom of the front panel to secure the NI PXI-8106 to the chassis.
9. Check the installation.
10. Connect the keyboard and mouse to the appropriate connectors. If you are using a PS/2 keyboard and a PS/2 mouse, a Y-splitter adapter is available to connect both to a single USB connector. Refer to Figure 4-1, *Y-Splitter Cable*.
11. Connect the DVI monitor video cable to the DVI connector. If you are using a VGA monitor, use the DVI-to-VGA adapter included with your kit.
12. Connect devices to ports as required by your system configuration.
13. Power on the display device.
14. Power on the chassis.
15. Verify that the controller boots. If the controller does not boot, refer to the *What if the NI PXI-8106 does not boot?* section of Chapter 5, *Troubleshooting*.

Figure 2-2 shows an NI PXI-8106 installed in the system controller slot of a National Instruments PXI-1042 chassis. You can place PXI devices in any other slots.

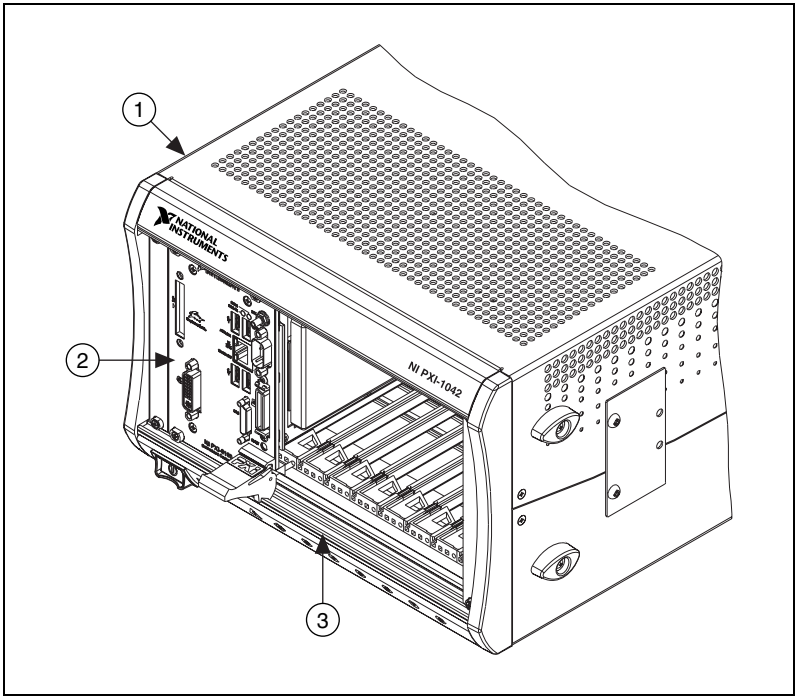

1	PXI-1042 Chassis	2	NI PXI-8106 Controller	3	Injector/Ejector Rail

Figure 2-2. NI PXI-8106 Controller Installed in a PXI Chassis

How to Remove the Controller from the PXI Chassis

The NI PXI-8106 controller is designed for easy handling. To remove the unit from the PXI chassis, complete the following steps:

1. Power off the chassis.
2. Remove any cables that may be attached to the controller front panel.
3. Unscrew the bracket-retaining screws in the front panel. Refer to Figure 2-1 for the location of these screws.
4. Press the injector/ejector handle down.
5. Slide the unit out of the chassis.

BIOS Setup

You can change the NI PXI-8106 configuration settings in the BIOS setup. The BIOS is the low-level interface between the hardware and PC software that configures and tests your hardware when you boot the system. The BIOS setup program includes menus for configuring settings and enabling NI PXI-8106 controller features.

Most users do not need to use the BIOS setup program, as the NI PXI-8106 controller ships with default settings that work well for most configurations.

Caution Changing BIOS settings may lead to incorrect controller behavior and possibly an unbootable controller. If this happens, follow the instructions for restoring default settings in the *System CMOS* section. In general, do *not* change a setting unless you are absolutely certain what it does.

Entering BIOS Setup

To start the BIOS setup utility, complete the following steps:

1. Power on or reboot your NI PXI-8106 controller.
2. When the message **`Press <DEL> to enter SETUP`** appears, press the Delete key on the keyboard. The message **`Entering Setup`** appears, and the setup program is loaded after a short delay.
3. When you first enter the BIOS setup program, it displays the **Main** menu.

Use the following keys to navigate through the BIOS setup:

- **Left Arrow, Right Arrow**—Use these keys to move between the different setup menus. If you are in a submenu, these keys have no effect, and you need to press <Esc> to leave the submenu first. (To use the arrows on the numeric keypad, you must turn off Num Lock.)
- **Up Arrow, Down Arrow**—Use these keys to move between the options within a setup menu. (To use the arrows on the numeric keypad, you must turn off Num Lock.)
- **<Enter>**—Use this key either to enter a submenu or display all available settings for a highlighted configuration option.
- **<Esc>**—Use this key to return the parent menu of a submenu. At the top-level menus, this key serves as a shortcut to the **Exit** menu.

- **<+> and <–>**—Use these keys to cycle between all available settings for a selected configuration option.
- **<Tab>**—Use this key to select time and date fields.

Main Setup Menu

The most commonly accessed and modified BIOS settings are in the **Main** setup menu. The **Main** setup menu includes the following settings:

- **System Time & Date**—This setting controls the time of day, which is stored in a battery-backed real-time clock. Most operating systems also include a way to change this setting. Use <+> and <–> in conjunction with <Enter> and <Tab> to change these values.
- **Require Keyboard to Boot**—When **Enabled**, a missing or malfunctioning keyboard causes the BIOS to halt with an error. When **Disabled**, the BIOS allows booting without a keyboard. If you are using a USB keyboard, you may attach it at any time during the powered up state. To use this controller in a "headless" mode, you must set this option to **Disabled**. The default value is **Enabled**.

Note Attaching a USB-to-PS/2 keyboard adapter may allow the system to boot even if no PS/2 keyboard is attached.

- **Num Lock**—This setting indicates whether you turn on Num Lock at boot time. The default value is **On**.
- **SATA Port**—This item displays the SATA devices detected in the system. Normally, you do not need to modify this item. However, if a SATA device is not autodetected properly, you can specify it manually by pressing <Enter> on the item.
- **IDE Channel 0 Master**—These items display the IDE/ATA devices detected in the system. Normally, you do not need to modify these items. However, if an IDE/ATA device is not autodetected properly, you can specify it manually by pressing <Enter> on an item.
- **System Information**—This setting displays a screen containing important system information about the NI PXI-8106 controller.

Advanced Setup Menu

This menu contains BIOS settings that normally do not require modification. If you have specific problems such as unbootable disks or resource conflicts, you may need to examine these settings.

Caution Changing settings in this menu may result in an unstable or unbootable controller. If this happens, follow the procedures outlined in the *System CMOS* section to restore BIOS settings to their factory defaults.

The **Advanced** setup menu includes the following settings:

- **Reset Configuration Data**—A portion of the EEPROM on the controller is designated as the Extended System Configuration Data region (ESCD). The BIOS and Plug-and-Play operating systems use this table to store the *Last Known Good* configuration of system peripherals. If you experience resource conflicts or peripheral malfunction, set this setting to **Yes** to force the BIOS to recreate the ESCD on the next reboot. This is rarely necessary.
- **Integrated Peripherals**—Use this setting to bring up the **Integrated Peripherals** submenu. (Refer to the *Integrated Peripherals Submenu* section.)
- **Quick Boot Mode**—When you enable this option, certain lengthy BIOS tests that rarely fail are skipped to shorten controller boot time. The default is **Enabled**.
- **Summary Screen**—This setting controls the display of the summary screen shown after BIOS completes its initialization, but before booting takes place. You can disable this screen in the interest of shortening controller boot time. The default is **Disabled**.
- **PXE Network Boot**—This setting enables the option for booting from a network PXE server on the subnet. The default is **Disabled**.

Integrated Peripherals Submenu

Use this submenu to apply nondefault configurations to the front panel peripherals of an NI PXI-8106 controller. Normally, you do not need to modify these settings, as the factory default settings provide the most compatible and optimal configuration possible.

- **Serial Port A**—This setting enables or disables COM1. You also can change this setting to **Enabled** and modify the base address and Interrupt Request Level (IRQ) of a port. The default is **Auto**, which places COM1 at 0x3F8 IRQ 4.
- **Parallel Port**—Use this setting to enable or disable LPT1. You also can change this setting to **Enabled** and modify the base address, IRQ level, and ISA Direct Memory Access (DMA) channel of the port. The default is **Auto**, which places LPT1 at 0x378, IRQ 7, using ISA DMA Channel 3 if necessary.

- **Parallel Port Mode**—The PC industry has created several different modes of operation for this port over the years. Usually, the default setting works for all applications. However, if a parallel port device specifically requires a nondefault setting, you can change it here. The default is **Bidirectional**, for full IEEE 1284 capabilities.
- **Legacy USB Support**—Use this setting to use a USB keyboard and mouse as if they were standard PS/2-style peripherals. You *must* enable this setting to use these devices in operating systems with no USB support and to boot from a USB floppy or CD-ROM. The BIOS setup screen always works with USB keyboards regardless of this setting. The default is **Enabled**.

Note Certain real-time applications may require you to disable this setting to reduce loop time jitter. When the controller is configured to boot LabVIEW RT, legacy USB support is automatically disabled.

- **SATA Mode**—This setting determines whether the SATA controller operates in **Enhanced** or **Compatible** mode. **Enhanced** mode provides the advanced features of a SATA controller, while **Compatible** mode provides legacy backwards compatibility with standard ATA for operating systems that do not natively support SATA. The default setting is **Enhanced**.

Note When the controller is configured to boot LabVIEW RT, SATA Mode is automatically configured for **Compatible** mode.

- **AHCI Configuration**—This setting determines whether AHCI mode is **Enabled** or **Disabled** for the SATA port. Because some operating systems do not support AHCI mode, you can use this setting to disable AHCI mode so that non-compatible OSes function correctly. The default setting is **Enabled**.
- **Multi-Core Processing**—This setting determines whether or not the second core processor on the Intel® Core™ 2 Duo T7400 is enabled. The default setting is **Enabled**.
- **Monitor DDC**—This setting determines how the monitor DDC is routed. Use this setting to select whether or not the DDC is routed for an Analog monitor or a DVI monitor. In order to use a DVI monitor, this setting must be set to **DVI**. An analog monitor, however, will function with this option set to either **Analog** or **DVI**. The DDC communication path is only enabled when set to **Analog** for an analog monitor, so certain advanced features of your analog monitor may only be enabled when routing DDC to **Analog**. The default setting is **DVI**.

- **Force IGD Primary**—This setting determines how the BIOS prioritizes video controllers when external video cards are present in the system. During POST, only one device can act as the video display device. When set to **Enabled**, the BIOS allows the integrated graphics device to remain the video display device. When set to **Disabled**, the BIOS allows an external graphics card, if present, to act as the default video display device. Note that even when set to **Disabled**, the integrated graphics device still acts as the video display device if it is the only one available in the system. The default setting is **Disabled**.
- **ExpressCard Hot-Plug Resources**—This setting determines whether or not resource pre-allocation is **Enabled** or **Disabled** for the ExpressCard port. When this setting is **Enabled**, the BIOS will pre-allocate memory space, I/O space, and PCI bus numbers for the ExpressCard port, allowing non-PCI Express-aware operating systems to support hot-plugging ExpressCard devices. When this setting is **Disabled**, no resources will be pre-allocated, and you may need to restart the OS when hot-plugging an ExpressCard device. The default setting is **Enabled**.
- **Hot-Plug Bus Gap**—This setting determines the number of PCI buses that will be reserved by the BIOS for ExpressCard PCI-PCI bridges that may be hot-plugged in the ExpressCard slot. This setting is only applicable if **ExpressCard Hot-Plug Resources** is set to **Enabled**. The default value for this setting is **8** PCI buses.
- **I/O**—This setting determines the amount of I/O space, in bytes, that will be reserved by the BIOS for PCI-PCI bridges that may be hot-plugged in the ExpressCard slot. This setting is only applicable if **ExpressCard Hot-Plug Resources** is set to **Enabled**. The default value for this setting is **4096** bytes of I/O space.
- **Memory**—This setting determines the amount of memory space, in bytes, that will be reserved by the BIOS for PCI-PCI bridges that may be hot-plugged in the ExpressCard slot. This setting is only applicable if **ExpressCard Hot-Plug Resources** is set to **Enabled**. The default value for this setting is **32** megabytes of memory.
- **Pre-fetchable Memory**—This setting determines the amount of pre-fetchable memory space, in bytes, that will be reserved by the BIOS for PCI-PCI bridges that may be hot-plugged in the ExpressCard slot. This setting is only applicable if **ExpressCard Hot-Plug Resources** is set to **Enabled**. The default value for this setting is **32** megabytes of pre-fetchable memory.

PXI Setup Menu

Use this menu to control and route certain signals on the PXI backplane. Normally, you do not need to modify these settings. However, other sections of this manual may indicate that modifications are necessary and may lead to unpredictable behavior.

- **APIC Routing**—This item is valid only for Windows XP and 2000 and other modern operating systems. Select **Enabled** to initialize the IOAPIC and local APIC in uniprocessor mode. Select **Disabled** to use the legacy PIC for interrupt routing. The default setting is **Enabled**.
- **PIRQx Routing**—This setting selects the routing option for PXI/PCI devices connected to PIRQx. This settings affects OSes that do not use APIC routing. The default setting for all PIRQx options is **IRQ10**.
- **Per-Slot Device Settings**—This setting brings up the **Per-Slot Device Settings** submenu. Refer to the *Per-Slot Device Settings Submenu* section.

Per-Slot Device Settings Submenu

Use this menu to configure options that can be modified for individual PCI devices in a PXI chassis.

Note Scanning for Option ROMs on devices behind a PCI bridge cannot be disabled.

PCI Device x Option ROM Scan—This setting selects whether PCI device *x* will be scanned for an option ROM. Setting this option to **Enabled** allows the BIOS to scan for a PCI option ROM on this PCI device. Setting to **Disabled** prevents the BIOS from detecting option ROMs on this device. Setting to **Disabled** does not completely disable the PCI device, just the option ROM scan. The default is **Enabled**.

LabVIEW RT Options Setup Menu

Use this menu to configure boot options for LabVIEW RT if it is installed on the controller. If you are not using LabVIEW RT, you should leave these settings at default.

Note The first three settings below override the behavior of the switches on SW2. Refer to *LabVIEW RT Configuration Switches* section for more information. To use the settings from the switches, select **Use Hardware Switch** for each option.

Boot Configuration—This setting selects whether the controller should boot LabVIEW RT, LabVIEW RT Safe Mode, or an installed OS such as Windows XP. The default is **Use Hardware Switch**.

Disable Startup VI—If the controller becomes inaccessible because of a startup VI, this switch can prevent VIs from automatically running at startup. The default is **Use Hardware Switch**.

Reset IP Address—If the controller is deployed to a different subnet from which it was originally configured, or if the current IP address is invalid, use this switch to reset the IP address to 0.0.0.0 during LabVIEW RT startup. The default is **Use Hardware Switch**.

Video Output—This setting enables normal video display output when set to **Auto**. Set to **Disable** to disable video and reduce jitter with LabVIEW RT. Note that the video display is disabled only when the boot switch is also set to **On** to boot LabVIEW RT. The default setting is **Auto**.

Security Menu

Use this menu to enable BIOS security options.

Set User Password—This setting allows you to specify a password that must be entered to boot the system. To activate this feature, you must first specify a Supervisor password and enable the **Password on boot** feature. By default, no password is specified.

Set Supervisor Password—This setting allows you to specify a password that must be entered to access the BIOS setup options. By default, no password is specified.

Password on Boot—This setting controls whether or not a password is required to boot the system. If enabled, the user must enter the User Password to boot the system. The default setting is **Disabled**.

Write Protect Boot Sector—When set to **Yes**, this setting prevents modification of a hard disk boot sector via INT 13h services, which may help prevent certain computer viruses from infecting the controller. This setting does not prevent boot sector modification by 32-bit operating system drivers that access the hard disk directly. The default is **No**.

Boot Setup Menu

This screen displays the boot order of devices associated with the controller. The BIOS proceeds down the **Boot priority order list** in search of a bootable device. Devices under the **Excluded from boot order** list will not be used for booting. If the BIOS fails to find any bootable device, the message **`Operating System Not Found`** is displayed, and the system halts.

- **PCI SCSI**—A SCSI drive (hard disk drive or CD-ROM) connected through a SCSI controller in the PXI chassis.
- **IDE HDD**—The internal hard drive.
- **USB HDD**—A USB based flash drive or hard disk drive.
- **USB CDROM**—A USB based CD-ROM drive.
- **USB FDC**—A USB based floppy disk drive.
- **PCI LAN**—A PXE Network boot device, if **PXE Network Boot** is enabled on the **Advanced** menu.

Exiting BIOS Setup

The **Exit** setup menu includes all available options for exiting, saving, and loading the BIOS default configuration. As an alternative to this screen, press <F9> to load BIOS default settings and <F10> to save changes and exit setup.

The **Exit** setup menu includes the following settings:

- **Exit Saving Changes**—Any changes made to BIOS settings are stored in the battery-backed System CMOS. The setup program then exits and reboots the controller.
- **Exit Discarding Changes**—Any changes made to BIOS settings during this session of the BIOS setup program are discarded. The setup program then exits and boots the controller without rebooting first.
- **Load Setup Defaults**—This setting restores all BIOS settings to the factory default. This is useful if the controller exhibits unpredictable behavior due to an incorrect or inappropriate BIOS setting. Notice that any nondefault settings such as boot order, passwords, and keyboardless operation are restored to their factory defaults. This may produce undesirable behavior, and in heavily customized cases, may cause the controller to malfunction or fail to boot.

- **Discard Changes**—Any changes made to BIOS settings during this session of the BIOS setup program are discarded. Unlike **Exit Discarding Changes**, however, the BIOS setup continues to be active.
- **Save Changes**—Changes made to BIOS settings during this session are committed to battery-backed System CMOS. The setup program remains active, allowing further changes.

System CMOS

The NI PXI-8106 contains a backed-up memory used to store BIOS configuration information.

Complete the following steps to clear the CMOS contents:

1. Power off the chassis.
2. Remove the controller from the chassis.
3. Move the jumper on W7 from pins 1–2 to pins 2–3, as shown in Figure 2-3.
4. Wait one second. Move the jumper back to pins 1–2.
5. Reinstall the controller in the chassis.

Caution Do *not* leave the jumper on pins 2–3. Doing so decreases battery life. In addition, leaving the jumper on the pins prevents the controller from booting.

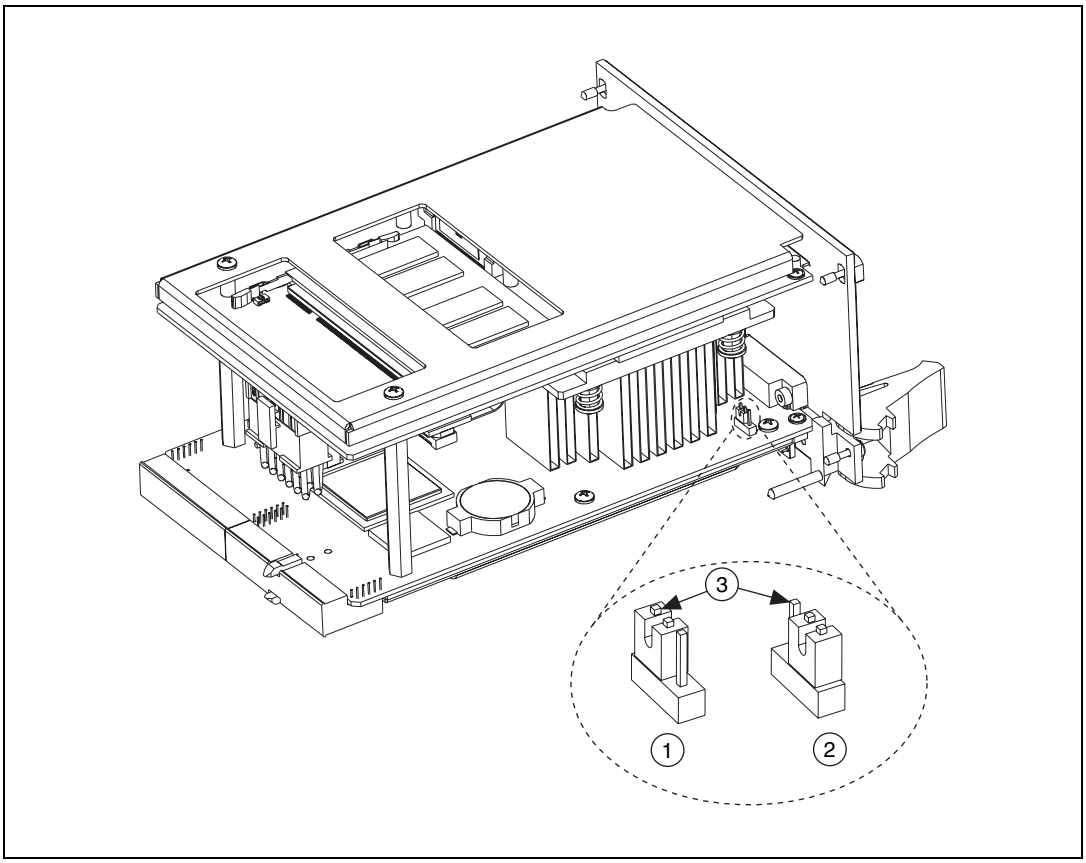

1	Normal Operation (Default)	2	Clear CMOS Contents	3	Pin 1

Figure 2-3. Clearing the CMOS Contents

LabVIEW RT Configuration Switches

Use the LabVIEW RT configuration switches to configure LabVIEW RT if it is installed on the controller. If you are not using LabVIEW RT, these switches should remain in the OFF position. The controller reads these switches only after a system reset. You must reboot the controller for any changes to take place.

The NI PXI-8106 controller includes the following LabVIEW RT configuration switches:

- **Switch 1—Boot LabVIEW RT**: Set this switch to ON to boot LabVIEW RT.

- **Switch 2—Boot Safe Mode**: Set this switch to ON to boot LabVIEW RT into safe mode to reconfigure TCP/IP settings and to download or update software from a host computer. This switch overrides the behavior of Switch 1. Booting the controller into safe mode does not start the embedded LabVIEW RT engine. After changing the settings or software, reboot the controller with this switch OFF to resume normal operation.
- **Switch 3—Disable Startup VI**: Set this switch to ON to prevent VIs from automatically running at startup if the controller becomes inaccessible because of a startup VI.
- **Switch 4—Reset IP Address**: Set this switch to ON to reset the IP address to 0.0.0.0 and other TCP/IP settings to their defaults. Use this switch if moving the controller to a different subnet or if the current TCP/IP settings are invalid.

Figure 2-4 shows the location of the LabVIEW RT configuration switches. The switches are shown in the OFF position.

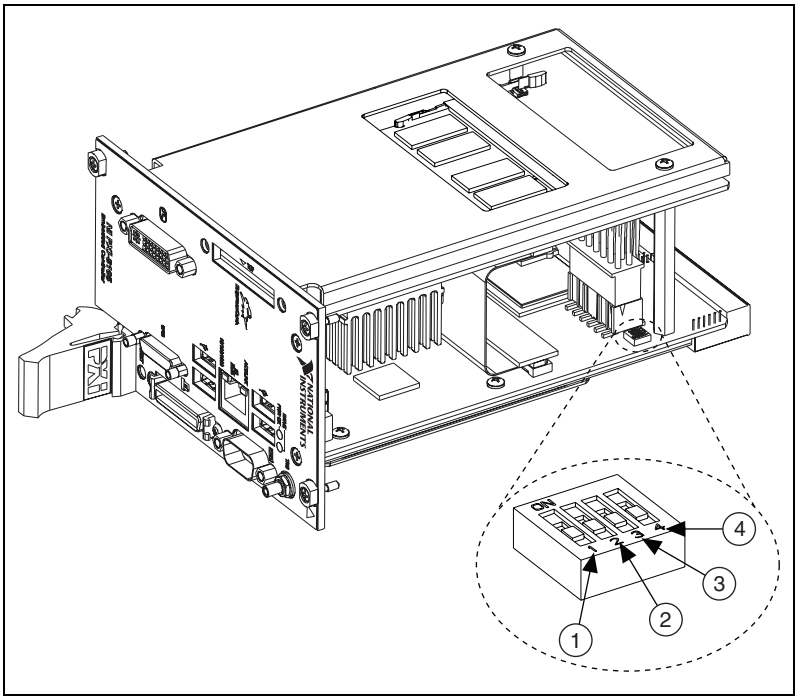

1	Switch 1—Boot LabVIEW RT	3	Switch 3—Disable Startup VI
2	Switch 2—Boot Safe Mode	4	Switch 4—Reset IP Address

Figure 2-4. LabVIEW RT Configuration Switches

Drivers and Software

Files and Directories Installed on Your Hard Drive

Your hard drive includes a directory called `images` in its root that contains software and soft copies of manuals for the installed devices. The directory structure under the `images` directory is logically organized into several levels.

In the `images` directory, you will find a `manuals` directory, an `os` directory, and a `drivers` directory.

The `manuals` directory contains quick reference guides, technical reference manuals, and National Instruments software manuals, all in Adobe Acrobat format. To access any manual, change your directory to `c:\images\manuals` and list the contents of that directory. You will see several files, one corresponding to each device.

The `os` directory contains a subdirectory corresponding to the operating system installed on your controller.

The rest of the directories correspond to each device in your controller. Within each of these directories are the drivers for the devices. These files and directories are copied exactly from the manufacturer distribution disks, so the naming conventions vary from device to device.

PXI Features

PXI Trigger Connectivity

The SMB connector on the NI PXI-8106 front panel can connect to or from any PXI backplane trigger line. A trigger allocation process is needed to prevent two resources from connecting to the same trigger line, resulting in the trigger being double-driven and possibly damaging the hardware. At the time of this manual's publication, this software is not yet available for Windows. Contact National Instruments for more information.

Chassis Configuration

Configuration of the PXI system is handled through Measurement & Automation Explorer (MAX), included with the software pre-installed on your controller. MAX creates the `pxisys.ini` file, which defines the layout and parameters of your PXI system.

The configuration steps for single or multiple-chassis systems are the same. An example of a multichassis configuration is shown in Figure 2-5.

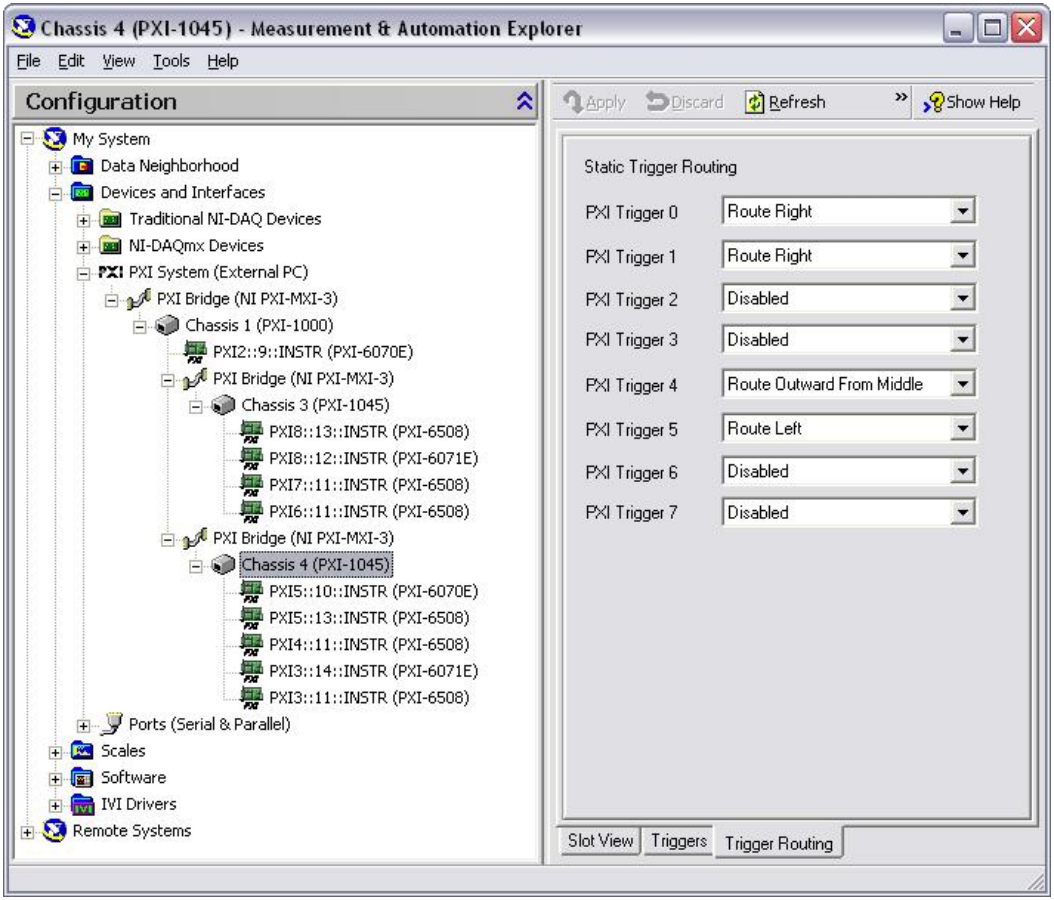

Figure 2-5. Multichassis Configuration in MAX

Basic PXI System Configuration

1. Launch MAX.
2. In the **Configuration** tree, click the **Devices and Interfaces** branch to expand it.
3. If the PXI system controller has not yet been configured, it is labeled **PXI System (Unidentified)**. Right-click this entry to display the pop-up menu, then select the appropriate controller model from the **Identify As** submenu.
4. Click the **PXI System** controller. The chassis (or multiple chassis, in a multichassis configuration) is listed below it. Identify each chassis by right-clicking its entry, then selecting the appropriate chassis model through the **Identify As** submenu. Further expanding the **PXI System** branch shows all devices in the system that can be recognized by NI-VISA. When your controller and all your chassis are identified, the required `pxisys.ini` file is complete.

The PXI specification allows many combinations of PXI chassis and system modules. To assist system integrators, the manufacturers of PXI chassis and system modules must document the capabilities of their products. The minimum documentation requirements are contained in `.ini` files, which consist of ASCII text. System integrators, configuration utilities, and device drivers can use these `.ini` files.

The capability documentation for the chassis is contained in a `chassis.ini` file provided by the chassis manufacturer. The information in this file is combined with information about the system controller to create a single system initialization file called `pxisys.ini` (PXI System Initialization). The NI PXI Platform Services software generates the `pxisys.ini` file from the `chassis.ini` file.

Device drivers and other utility software read the `pxisys.ini` file to obtain system information. For detailed information about initialization files, refer to the PXI specification at `www.pxisa.org`.

For a softcopy tutorial on how to configure your LabVIEW Real-Time Target, expand **Remote Systems** in the **Configuration** tree in MAX, select **Set up my system** for the first time on the main window, and open the LabVIEW Real-Time Configuration Tutorial.

Upgrading RAM

You can change the amount of installed RAM on the NI PXI-8106 by upgrading the SO-DIMM.

To upgrade the RAM, remove the NI PXI-8106 from the PXI chassis. To optimize both memory capacity and system performance, use the same size and speed memory module in each of the two module slots. The use of different size modules in each slot is supported, but system performance will be slower than using two matched modules. However, two mismatched modules will result in better performance than using a single module.

National Instruments offers the following types of SO-DIMMs for use with the NI PXI-8106 controller.

- PC2-5300 512 MB, 64 MB × 64, CL 5, 1.18 in. max (National Instruments part number 779302-512)
- PC2-5300 1 GB, 128 MB × 64, CL 5, 1.18 in. max (National Instruments part number 779302-1024)

Note National Instruments has tested and verified that the DDR2 SO-DIMMs we sell work with the NI PXI-8106. We recommend you purchase your DDR2 SO-DIMM modules from National Instruments. Other off-the-shelf DDR2 SO-DIMM modules are not guaranteed to work properly.

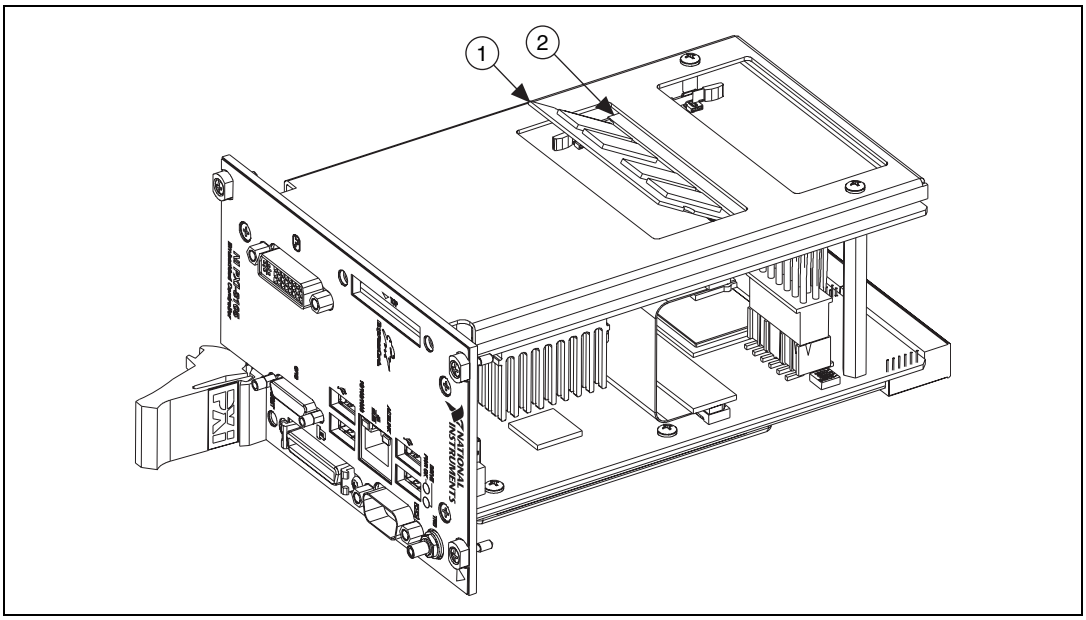

1	DDR2 SO-DIMM Module	2	DDR2 SO-DIMM Socket

Figure 2-6. Installing a DDR2 SO-DIMM in an NI PXI-8106 Controller

Hard Drive Recovery

NI PXI-8106 controllers include two methods of restoring the original factory condition of your hard drive. Hard drive-based recovery stores a factory backup on a separate portion of your hard drive allowing you to restore your controller without additional media. The NI PXI-8106 controller also ships with an OS Recovery CD that allows you to reinstall your operating system onto your hard drive through an external CD-ROM. For more information on these tools, refer to the documentation on your hard drive in the `c:\Images\Recovery` directory or KnowledgeBase 2ZKC02OK at `ni.com/support`.

Note Your system hot key is <F4>. To access the hard drive-based recovery tool, press and hold <F4> when video first appears during the boot process.

If you need to recover your factory-installed operating system from a CD, you can use the included OS re-installation CD with an external CD-ROM drive such as a USB CD-ROM drive. Boot the PXI controller using the OS re-installation CD to recover the OS. You also may need to reinstall other software after using the CD to recover the OS.

Note Recovering the OS erases the contents of your hard disk. Back up any files you want to keep.

Installing an OS

NI PXI-8106 controllers include a pre-installed OS. In some cases, you may want to install a different OS. When doing so, consider the following guidelines.

Installing from a CD-ROM

The NI PXI-8106 supports the installation of Windows XP from a USB CD-ROM. However, many other operating systems do not support installation from a USB CD-ROM. For example, Windows 2000 aborts during the install process because it does not have drivers for the CD-ROM device.

With DOS drivers, you can install Windows 9*x* operating systems. However, only a few USB CD-ROM drives have DOS drivers.

As an alternative to a USB CD-ROM drive, you can use an external SCSI CD-ROM with a PXI-SCSI adapter.

Note For additional assistance with installing or changing an operating system, refer to KnowledgeBase 2ZKC02OK at `ni.com/support`.

ExpressCard

This section provides information on the installation and removal of ExpressCard modules.

Installing an ExpressCard

You can install an ExpressCard module while the NI PXI-8106 is running. The NI PXI-8106 will automatically detect the card. ExpressCards are generally marked with a symbol or a label to indicate which end to insert into the slot. The cards are keyed to prevent incorrect insertion.

To install an ExpressCard, complete the following steps.

1. Hold the card so the top side is facing left.
2. Insert the card until it is completely seated in its connector. The connector has an automatic eject mechanism. If you insert the card and it is ejected, simply re-insert the card until it is seated.

If you encounter too much resistance, do not force the card. Check the card orientation and try again.

The PXI-8106 will automatically recognize the ExpressCard and load the appropriate driver(s). Third-party cards may require that you install additional drivers. Contact your ExpressCard vendor for more information.

Caution The ExpressCard interface is ESD sensitive. An electrostatic shock on the ExpressCard module while it is inserted may cause the controller to lock-up or reboot.

Removing an ExpressCard

To remove the ExpressCard module push in the module and then release to eject the card. Slide the card out of the slot.

Caution To avoid data loss and other potential issues, stop communication with your ExpressCard device before removing it from the PXI-8106. In Windows, use the Safely Remove Hardware tool to safely stop the ExpressCard.

3

I/O Information

Front Panel Connectors

Table 3-1 lists various I/O interfaces and their corresponding NI PXI-8106 external connectors, bus interfaces, and functions.

Table 3-1. NI PXI-8106 I/O Overview

I/O Interface	External Connector	Description
Video	DVI-I (24-pin DSUB)	Intel Extreme Graphics controller
Serial	COM1 (9-pin DSUB)	16550 RS-232 serial port
Ethernet	LAN (RJ45)	10/100/1000 Ethernet connection
Parallel	Parallel Port (36-pin champ)	IEEE 1284
USB (four ports)	USB 4-pin Series A stacked receptacle	Hi-Speed USB
PXI trigger	Trigger (SMB)	Routing PXI triggers to or from the backplane trigger bus
GPIB Controller	GPIB (25-pin Micro D)	General-Purpose Interface Bus, IEEE 488.1
ExpressCard/34 module	ExpressCard/34 slot	ExpressCard/34 Expansion

Front Panel

Figure 3-1 shows the front panel layout and dimensions of the NI PXI-8106. Dimensions are in inches [millimeters].

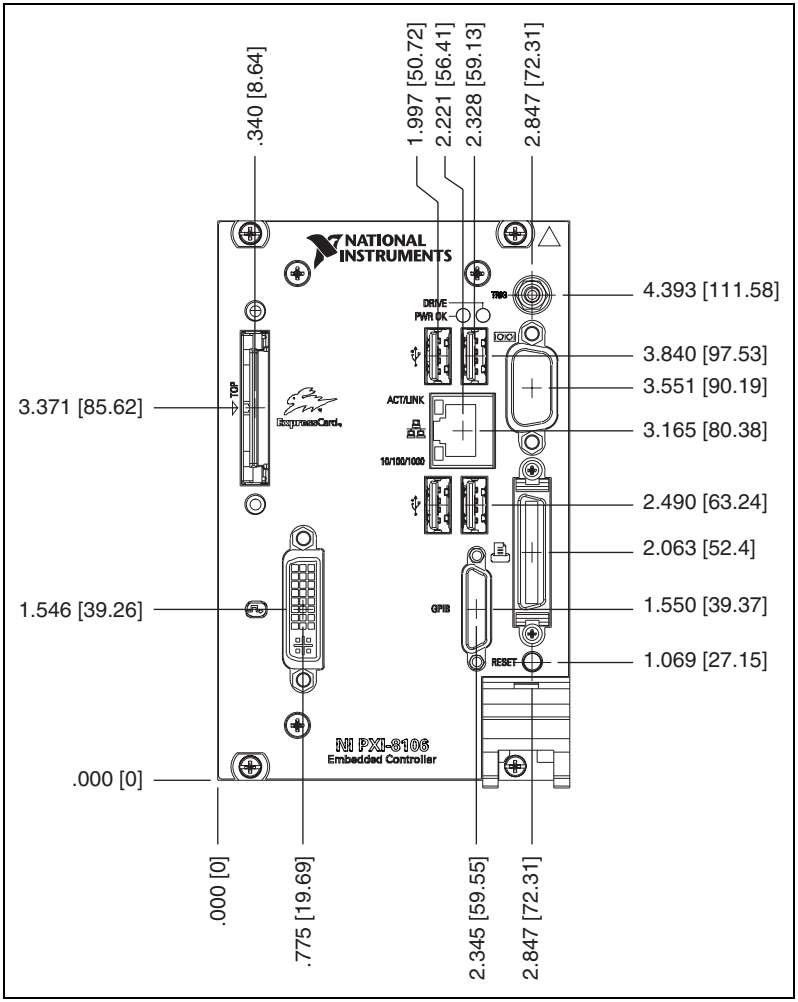

Figure 3-1. NI PXI-8106 Front Panel Layout and Dimensions

DVI-I

Figure 3-2 shows the location and pinouts for the DVI-I connector on the NI PXI-8106. Table 3-2 lists and describes the DVI-I connector signals.

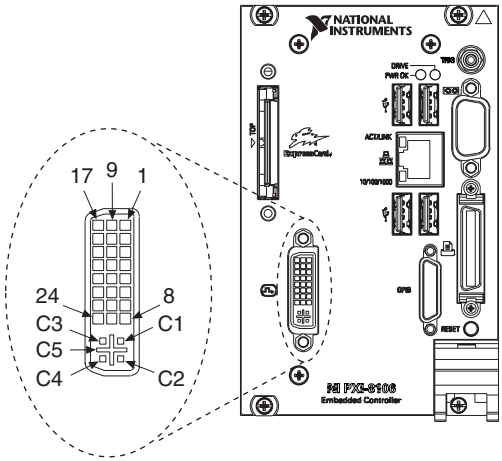

Figure 3-2. DVI-I Connector Location and Pinout

Table 3-2. DVI-I Connector Signals

Pin	Signal Name
1	TMDS Data2–
2	TMDS Data2+
3	TMDS Data2/4 Shield
4	Reserved
5	Reserved
6	DDC Clock [SCL]
7	DDC Data [SDA]
8	Analog vertical sync
9	TMDS Data1–

Table 3-2. DVI-I Connector Signals (Continued)

Pin	Signal Name
10	TMDS Data1+
11	TMDS Data1/3 Shield
12	Reserved
13	Reserved
14	+5 V Power
15	Ground (for +5 V)
16	Hot Plug Detect
17	TMDS Data0−
18	TMDSData0+
19	TMDS Data0/5 Shield
20	Reserved
21	Reserved
22	TMDS Clock Shield
23	TMDS Clock+
24	TMDS Clock−
C1	Analog Red
C2	Analog Green
C3	Analog Blue
C4	Analog Horizontal Sync
C5	Analog GND Return: (analog R, G, B)

COM1

Figure 3-3 shows the location and pinouts for the COM1 connector on the NI PXI-8106. Table 3-3 lists and describes the COM1 connector signal.

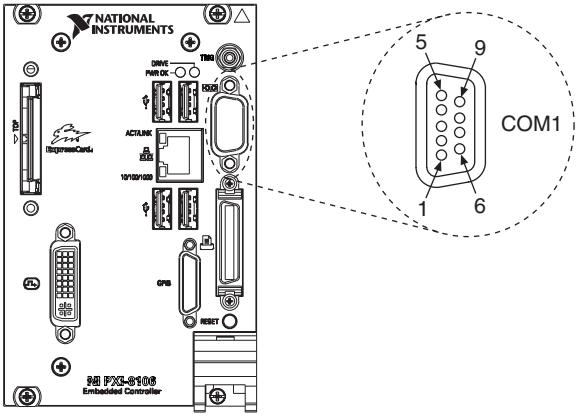

Figure 3-3. COM1 Connector Location and Pinout

Table 3-3. COM1 Connector Signals

Pin	Signal Name	Signal Description
1	DCD	Data Carrier Detect
2	RXD	Receive Data
3	TXD	Transmit Data
4	DTR	Data Terminal Ready
5	GND	Ground
6	DSR	Data Set Ready
7	RTS	Ready to Send
8	CTS	Clear to Send
9	RI	Ring Indicator

Ethernet

Figure 3-4 shows the location and pinouts for the Ethernet connector on the NI PXI-8106. Table 3-4 lists and describes the Ethernet connector signals.

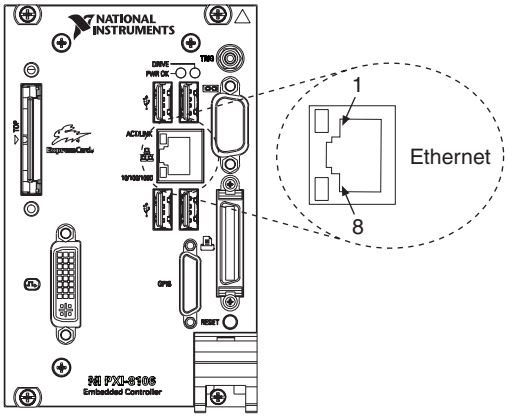

Figure 3-4. Ethernet Connector Location and Pinout

Table 3-4. Ethernet Connector Signals

Pin	Fast Ethernet	Gigabit Ethernet
1	TX+	TX_A+
2	TX–	TX_A–
3	RX+	RX_B+
4	NC	TX_C+
5	NC	TX_C–
6	RX–	RX_B–
7	NC	RX_D+
8	NC	RX_D–

Note The Ethernet controller can perform automatic crossover, thus eliminating the need for crossover cables.

Table 3-5. 10/100/1000 LAN Connector LED States

LED	Color	LED State	Condition
Top	Green	Off	LAN link is not established.
		On (steady state)	LAN link is established.
		On (brighter and pulsing)	The controller is communicating with another computer on the LAN.
Bottom	Unlit	Off	10 Mbit/sec data rate is selected.
	Green	On	100 Mbit/sec data rate is selected.
	Orange	On	1000 Mbit/sec data rate is selected.

Parallel Port

Figure 3-5 shows the location and pinouts for the IEEE 1284 (parallel) connector on the NI PXI-8106. Table 3-6 lists and describes the IEEE 1284 connector signals.

Parallel port adapter cables are available from National Instruments, part number 777169-01.

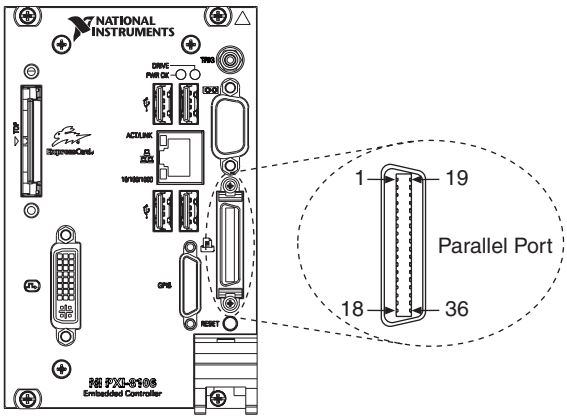

Figure 3-5. Parallel Port Connector Location and Pinout

Table 3-6. Parallel Port Connector Signals

Pin	Default Configuration (LPT)	
	Signal Name	**Signal Description**
1	BUSY	Device Busy
2	SLCT	Select
3	ACK#	Acknowledge
4	FAULT#(ERROR#)	Fault
5	PAPEREND	Paper End
6	PD0	Data Bit 0
7	PD1	Data Bit 1
8	PD 2	Data Bit 2
9	PD3	Data Bit 3
10	PD4	Data Bit 4
11	PD5	Data Bit 5
12	PD6	Data Bit 6
13	PD7	Data Bit 7
14	INIT#	Initialize Printer
15	STROBE#	Strobe
16	SLCTIN#	Select Input
17	AUTOFD#	Auto Line Feed
18	+5V	+5 V
19–35	GND	Ground
36	NC	Not Connected

Universal Serial Bus

Figure 3-6 shows the location and pinouts for the Universal Serial Bus (USB) connectors on the NI PXI-8106. Table 3-7 lists and describes the USB connector signals.

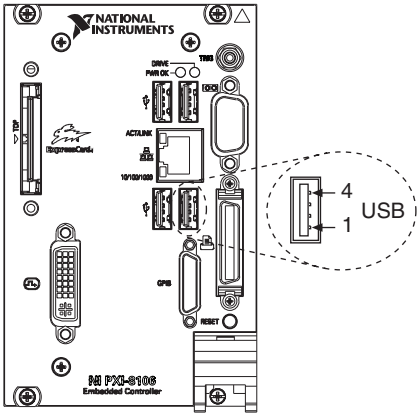

Figure 3-6. USB Connector Location and Pinout

Table 3-7. USB Connector Signals

Pin	Signal Name	Signal Description
1	VCC	Cable Power (+5 V)
2	D–	USB Data –
3	D+	USB Data +
4	GND	Ground

Trigger

The TRIG connector is the software-controlled trigger connection for routing PXI triggers to or from the backplane trigger bus.

Figure 3-7 shows the TRIG connector location on the NI PXI-8106. Table 3-8 lists and describes the trigger connector signals.

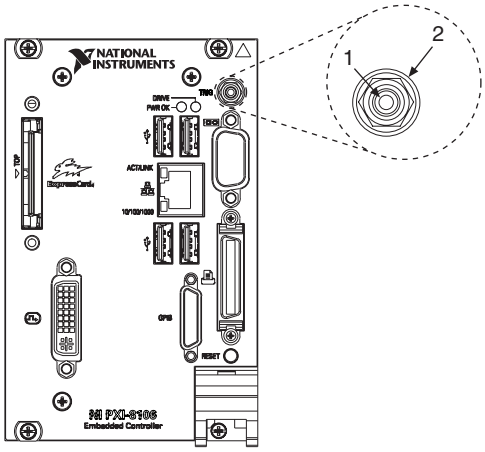

Figure 3-7. TRIG Connector Location and Pinout

Table 3-8. TRIG Connector Signals

Pin	Signal Name	Signal Description
1	TRIG	Trigger
2 (Shield)	GND	Ground

GPIB (IEEE 488.2)

Figure 3-8 shows the location and pinouts for the GPIB connector on the NI PXI-8106. Table 3-9 lists and describes the GPIB connector signals.

National Instruments provides a GPIB mating connector, part number 183285-0R2.

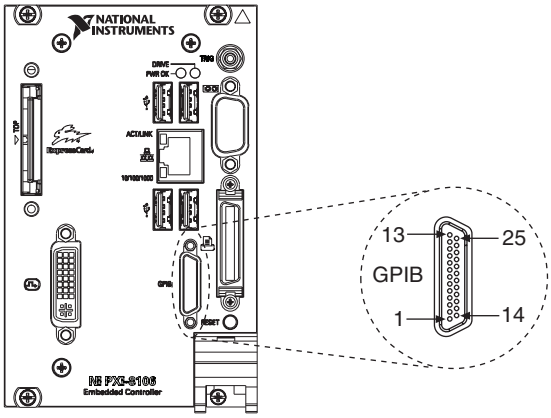

Figure 3-8. GPIB Connector Location and Pinout

Table 3-9. GPIB Connector Signals

Pin	Signal Name	Signal Description
1	DIO1#	Data Bit 1
2	DIO2#	Data Bit 2
3	DIO3#	Data Bit 3
4	DIO4#	Data Bit 4
5	EOI#	End or Identify
6	DAV#	Data Valid
7	NRFD#	Not Ready for Data
8	NDAC#	Not Data Accepted
9	IFC#	Interface Clear
10	SRQ#	Service Request

Table 3-9. GPIB Connector Signals (Continued)

Pin	Signal Name	Signal Description
11	ATN#	Attention
12	SHIELD	Chassis ground
13	DIO5#	Data Bit 5
14	DIO6#	Data Bit 6
15	DIO7#	Data Bit 7
16	DIO8#	Data Bit 8
17	REN#	Remote Enable
18–25	GND	Logic Ground

ExpressCard/34 Slot

The NI PXI-8106 controller is equipped with an ExpressCard/34 slot on the front panel, which provides I/O expansion and options for removable storage, Ethernet, and a variety of other I/O.

Figure 3-9 shows the location and pinouts for the ExpressCard/34 slot on the NI PXI-8106. Table 3-10 lists and describes the ExpressCard connector signals.

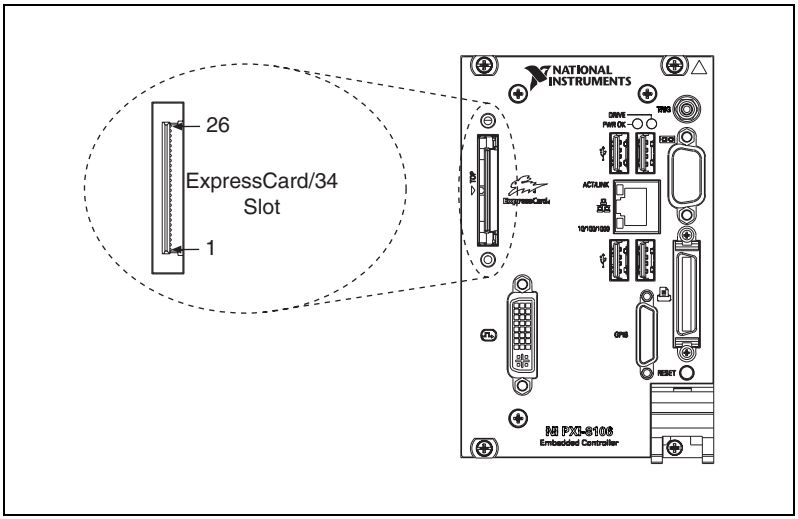

Figure 3-9. ExpressCard/34 Slot Location and Pinout

Table 3-10. ExpressCard Connector Signals

Pin	Signal Name	Signal Description
1	GND	Ground
2	USBD–	USB Data –
3	USBD+	USB Data +
4	CPUSB#	USB Presence
5	RESERVED	Reserved by spec for future use
6	RESERVED	Reserved by spec for future use
7	SMBCLK	SMBus Clock
8	SMBDATA	SMBus Data
9	+1.5V	Power
10	+1.5V	Power
11	WAKE#	PE Wake
12	+3.3VAUX	Power
13	PERST#	PE Reset
14	+3.3V	Power
15	+3.3V	Power
16	CLKREQ#	Clock Request
17	CPPE#	PE Presence
18	REFCLK–	Reference Clock –
19	REFCLK+	Reference Clock +
20	GND	Ground
21	PERn	PE Data Receive –
22	PERp	PE Data Receive +
23	GND	Ground
24	PETn	PE Data Transmit –
25	PETp	PE Data Transmit +
26	GND	Ground

Front Panel Features

The NI PXI-8106 controller has the following front-panel features:

- A controller reset pushbutton (press the button to generate a reset to the controller)
- Two front panel LEDs that show PC status
  - The **POWER OK** LED indicates the power status of the controller. The LED will indicate one of the following states:
    - ON steady—PXI and onboard power is on and within regulation limits.
    - Blinking—One of the PXI or onboard supplies is operating outside of the normal limits, or is not functioning.
    - OFF—The power to the controller is off.
  - The **DRIVE** LED indicates when an access to the internal hard disk is occurring.

Data Storage

The NI PXI-8106 has the following data storage features:

- Internal hard drive
  - 2.5 in. notebook hard drive
  - Supports up to ATA-5 (UDMA 100) for extended temperatures or SATA for standard configuration
- USB storage support—USB CD-ROM, mass storage device, or floppy drive

4

Common Configuration Questions

This chapter answers common configuration questions you may have when using the NI PXI-8106 embedded controller.

General Questions

What do the LEDs on the NI PXI-8106 front panel mean?

Refer to the LED status descriptions in the *Front Panel Features* section of Chapter 3, *I/O Information*.

How do I check the configuration of the memory, hard drive, time/date, and so on?

You can view these parameters in the BIOS setup. To enter the BIOS setup, reboot the NI PXI-8106 and press <Delete> during the memory tests. Refer to the *Entering BIOS Setup* section of Chapter 2, *Installation and Configuration*, for more information.

Can I use the internal hard drive and an external hard drive at the same time?

Yes.

Boot Options

What devices can I boot from?

The NI PXI-8106 can boot from the following devices:

- The internal hard drive
- An external SCSI hard drive or CD-ROM if an SCSI adapter, such as the PXI-8214, is used
- A network PXE server on the same subnet
- An external USB mass storage device such as a USB hard drive, USB CD-ROM, or USB key

- An external USB floppy drive
- Most PCI-based boards that provide an Option ROM

Note There are some limitations when booting from a USB device. Windows XP can be installed from a USB CD-ROM, but earlier versions of Windows cannot. The NI PXI-8106 BIOS configures the USB devices so that they will work in a DOS environment.

How do I configure the controller to boot from these devices?

There are two methods.

- Enter the BIOS setup by rebooting the controller and pressing <Delete> during the memory tests. Select the **Boot** menu. You will see a list of all bootable devices, ordered by device type. You can set the boot order using <+> and <–>. Set the order by device type and set the order for the devices listed within the device type.
- To boot from a different device without permanently changing the boot order, press <Esc> during POST. After the BIOS completes the POST and just before the controller boots the OS, the **Boot** menu is displayed. You can select the device type you want to boot from.

Cables and Connections

How do I plug both a PS/2 mouse and PS/2 keyboard into the controller?

The NI PXI-8106 has no PS/2 connector, and you need to use a USB Y-splitter cable as shown in Figure 4-1, or a similar device, to connect both a PS/2 mouse and PS/2 keyboard. National Instruments Part Number 778713-01 is such a cable and is available through the online catalog at `ni.com/products`.

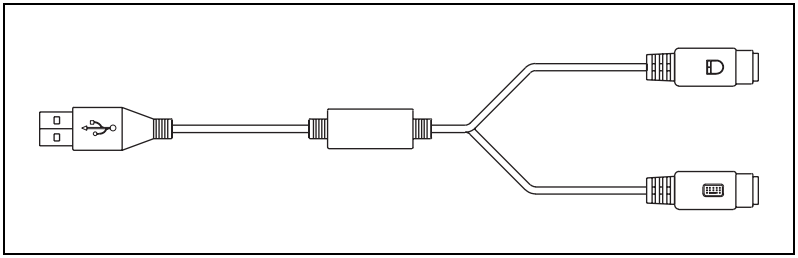

Figure 4-1. Y-Splitter Cable

What if I don't have a Y-splitter cable? Can I still use a mouse and keyboard?

If you do not have a Y-splitter cable, plug a USB keyboard into any USB connector. You can also plug a USB mouse into any USB connector.

How do I connect a standard 25-pin LPT cable to the NI PXI-8106?

The NI PXI-8106 uses a type C LPT connector. Most parallel port devices use a type A connector. To use a device with a standard type A LPT connector, you need to use a type C-to-type-A LPT adapter. Parallel port adapter cables, part number 777169-01, are available through the online catalog at `ni.com/products`.

How do I connect a VGA monitor to the NI PXI-8106?

A VGA-to-DVI-I adapter (part number 762559-01) is included with your kit. You can use this adapter to connect a VGA monitor to the DVI-I port.

Software Driver Installation

How do I install or reinstall the video driver?

Refer to KnowledgeBase 3H3COSD8 at `ni.com/support`.

How do I install or reinstall the Ethernet driver?

Refer to KnowledgeBase 3H3COSD8 at `ni.com/support`.

How do I install or reinstall the GPIB driver?

The NI-488.2 driver for your GPIB port is installed by default when your controller is first shipped from the factory. To change the default installed driver, complete the following steps:

1. Download the latest GPIB driver from `ni.com/downloads`.
2. Install the driver and verify that the driver has properly detected the GPIB driver in the Device Manager. If you need more assistance, refer to `ni.com/support/install`.

How do I install software from a CD?

The compact size of the NI PXI-8106 does not allow for an integrated CD-ROM drive. You have the following options:

- **USB CD-ROM**—You can install from a USB CD-ROM using a bootable installation CD.
- **SCSI CD-ROM**—Other types of CD-ROM drives are available. Check with the vendor to make sure Windows XP supports the drive.
- **Mapped network drive**—You can use the Ethernet to connect to another computer. If you share the CD-ROM drive on the other computer, you can map the shared CD-ROM drive to a drive letter on the NI PXI-8106.

Upgrade Information

How do I upgrade system memory?

You can change the amount of installed RAM on the NI PXI-8106 by upgrading the DDR2 SO-DIMM.

To upgrade the RAM, remove the NI PXI-8106 from the PXI chassis. To optimize both memory capacity and system performance, use the same size and speed memory module in each of the two module slots. The use of different size modules in each slot is supported, but system performance will be slower than using two matched modules. However, two mismatched modules will result in better performance than using a single module.

National Instruments offers the following types of SO-DIMMs for use with the NI PXI-8106 controller.

- PC2-5300 512 MB, 64 MB × 64, CL 5, 1.18 in. max (National Instruments part number 779302-512)
- PC2-5300 1 GB, 128 MB × 64, CL 5, 1.18 in. max (National Instruments part number 779302-1024)

Note National Instruments has conducted thermal testing as well as mechanical shock and vibration testing, and has verified that the DDR2 SO-DIMMs we sell work with the NI PXI-8106. We recommend you purchase your DDR2 SO-DIMM modules from National Instruments. Other off-the-shelf DDR2 SO-DIMM modules are not guaranteed to work properly.

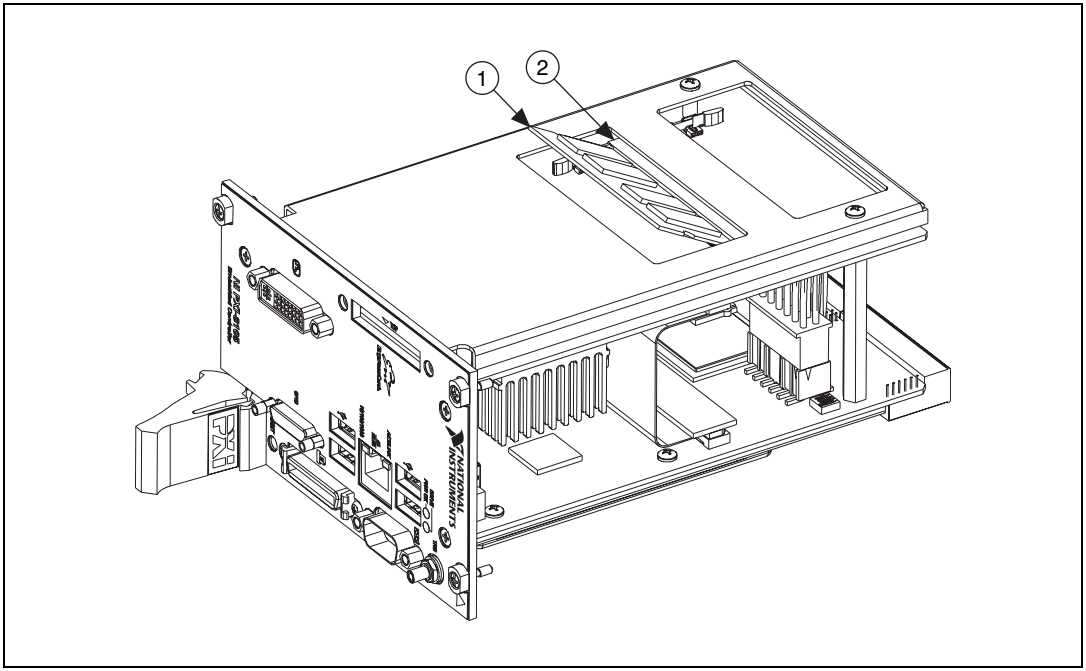

1	DDR2 SO-DIMM Module	2	DDR2 SO-DIMM Socket

Figure 4-2. Installing a DDR2 SO-DIMM in an NI PXI-8106 Controller

How do I flash a new BIOS?

You can download the new BIOS from `ftp.ni.com/support/pxi`. For more information, refer to KnowledgeBase 3H3COSD8.

Where do I get the latest software drivers?

The latest National Instruments software is available from `ni.com/downloads`. For peripheral drivers, refer to KnowledgeBase 3H3COSD8 at `ni.com`.

My NI PXI-8106 does not have an internal floppy drive. Is there a way to use an external drive?

Yes. The NI PXI-8106 controller supports and can boot from USB floppy drives. A USB floppy drive will not work with Windows NT4, but will work with Windows 2000 or Windows XP. Refer to the *Boot Options* section for more information.

A USB floppy drive is available from National Instruments, part number 778492-02.

PXI Configuration

How do I use the SMB trigger on the front panel?

For details, refer to the *PXI Features* section of Chapter 2, *Installation and Configuration*.

Why doesn't the NI PXI-8106 work with the PXI-8220 or PXI-8221?

A serialized IRQ conflict with the PXI-8220/8221 and the NI PXI-8106 prevents PC cards using ISA interrupts from working with the NI PXI-8106 controller. For more information, refer to KnowledgeBase 2G3ED80Z at `ni.com/support`.

5

Troubleshooting

This chapter answers common troubleshooting questions you may have when using the NI PXI-8106 embedded computer.

What if the NI PXI-8106 does not boot?

Several problems can cause a controller not to boot. Here are some things to look for and possible solutions.

Things to Notice:

- Which LEDs come on? The **Power OK** LED should stay lit. The **Drive** LED should blink during boot as the disk is accessed.
- Was the display installed prior to power-on? What appears on the display? Does it hang at some particular point (BIOS, Operating System, and so on)? If nothing appears on the screen, try a different monitor. Does your monitor work with a different PC? If it hangs, note the last screen output that you saw for reference when consulting National Instruments technical support.
- What has changed about the system? Did you recently move the system? Was there electrical storm activity? Did you recently add a new module, memory chip, or piece of software?

Things to Try:

- Make sure the chassis is plugged in to a working power source.
- Check any fuses or circuit breakers in the chassis or other power supply (possibly an uninterruptible power supply).
- Make sure the controller module is firmly seated in the chassis.
- Remove all other modules from the chassis.
- Remove any nonessential cables or devices.
- Try the controller in a different chassis.
- Try a similar controller in this same chassis.
- Clear the CMOS. (Refer to the *System CMOS* section of Chapter 2, *Installation and Configuration*.)

- Recover the hard drive on the controller. (Refer to the *Hard Drive Recovery* section of Chapter 2, *Installation and Configuration*.)
- Make sure the RAM is properly seated.

My controller boots fine until I get to Windows, at which point I cannot read the screen. This may include garbled output, white screen, black screen, or an out of synch message from the monitor.

This problem usually results from having the video card output set past the limits of the monitor. You will need to boot Windows in Safe Mode. To do this, reboot the controller. As Windows begins to boot, hold down <F8>. You should now be able to reset the video driver to lower settings. Try setting the resolution to 640 × 480 and the refresh rate to 60 Hz. Once you reboot, you can raise these values again, using the test option in Windows. These settings are accessible through the **Advanced** tab of the **Display** item in the **Control Panel**. Alternately, you can try a different monitor, preferably a newer and larger one.

If the system has been booted to Windows without a monitor attached, the driver may have defaulted to the video output connector being disabled. Press <Ctrl-Alt-F1> to re-enable the video display in Windows. Press <Ctrl-Alt-F4> to re-enable a DVI display. For more information, refer to KnowledgeBase 3OHCFRD8 at `ni.com/support`.

My system boots fine as long as a particular module is not in my chassis.

The most common cause of this is a damaged module. Try the module in a different chassis or with a different controller. Also, remove any external cables or terminal blocks connected to the system. If the module does not work in these cases, it is likely damaged. Contact the module manufacturer for further troubleshooting.

Refer to the KnowledgeBase or product manuals section at `ni.com` for more information specific to the chassis and controller with which you are having difficulties.

My CMOS is corrupted. How do I set it back to default?

1. Enter the BIOS setup program as described in the *Entering BIOS Setup* section of Chapter 2, *Installation and Configuration*.
2. Check the battery utility.
3. Press <F9> to load BIOS defaults.
4. Answer **Y** (Yes) to the verification prompt.
5. Select **Save and Exit Setup**.

As an alternative method, complete the following steps:

1. Power off the chassis.
2. Remove the controller from the chassis.
3. Move the jumper on W7 from pins 1–2 to pins 2–3 as shown in Figure 5-1.
4. Wait one second. Move the jumper back to pins 1–2.
5. Reinstall the controller in the chassis.

Caution Do *not* leave the jumper on pins 2–3. Doing so decreases battery life. Also, the controller will not boot.

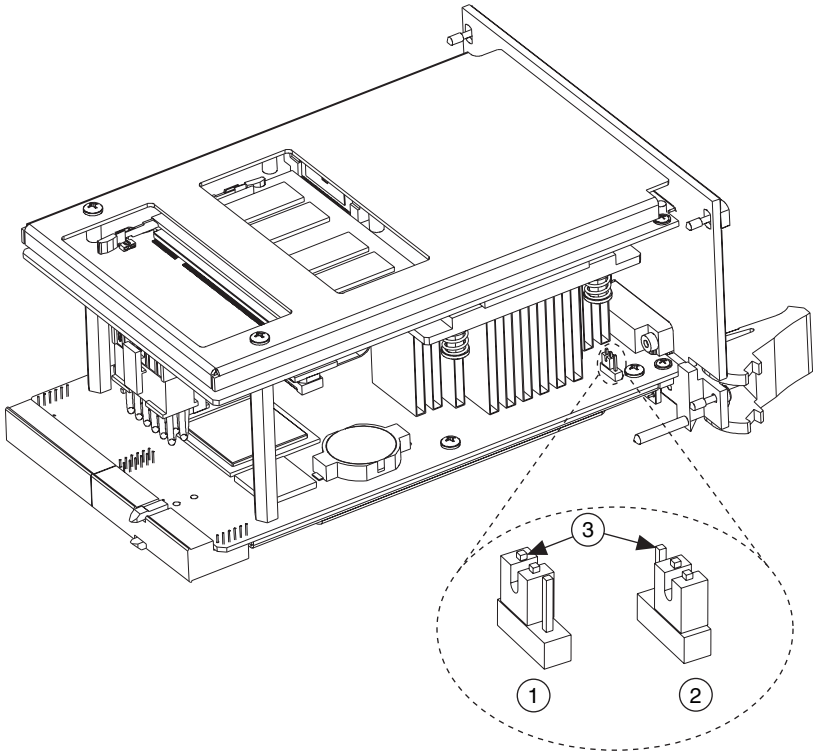

1 Normal Operation (Default)	2 Clear CMOS Contents	3 Pin 1

Figure 5-1. Clearing the CMOS Contents

A

Specifications

This appendix lists the electrical, mechanical, and environmental specifications of the NI PXI-8106 embedded computer.

Electrical

Voltage (V)	Current (A)	
	Typical	**Maximum**
+3.3	3.60	3.75
+5 (+5 V_{DC} and +5 V_{IO})	7.50	8.50
+12	0.005	0.005
–12	0	0

Physical

Board dimensions..... PXI 3U-size module
8.1 cm × 13 cm × 21.6 cm
(3.2 in. × 5.1 in. × 8.5 in.)

Slot requirements ..... One system slot plus three controller expansion slots

Compatibility ..... Fully compatible with PXI specification

Weight..... 0.94 Kg (2.1 lb) typical

Environment

Maximum altitude..... 2,000 m (at 25 °C ambient temperature)

Pollution Degree 2

Indoor use only.

Operating Environment

NI PXI-8106

Ambient temperature range .....5 to 50 °C in an NI PXI-1042 chassis (Tested in accordance with IEC-60068-2-1 and IEC-60068-2-2). Refer to the datasheet linked from the NI PXI-8106 Embedded Controller product page at `ni.com` for other controller/chassis combinations.

NI PXI-8106 Extended Temp. Option

Ambient temperature range .....0 to 55 °C (Tested in accordance with IEC-60068-2-1 and IEC-60068-2-2)

Relative humidity range.....10% to 90%, noncondensing (Tested in accordance with IEC-60068-2-56.)

Caution Clean the NI PXI-8106 with a soft nonmetallic brush. Make sure that the device is completely dry and free from contaminants before powering-on the controller again.

Storage Environment

NI PXI-8106

Ambient temperature range .....–20 to 65 °C (Tested in accordance with IEC-60068-2-1 and IEC-60068-2-2.)

NI PXI-8106 Extended Temp. Option

Ambient temperature range .....–40 to 71 °C (Tested in accordance with IEC-60068-2-1 and IEC-60068-2-2.)

Relative humidity range.....5% to 95% noncondensing (Tested in accordance with IEC-60068-2-56.)

Shock and Vibration

Operational shock ..... 30 g peak, half-sine, 11 ms pulse (Tested in accordance with IEC-60068-2-27. Test profile developed in accordance with MIL-PRF-28800F.)

Random vibration

Operating ..... 5 to 500 Hz, 0.3 g_{rms} (with solid-state hard drive)

Nonoperating ..... 5 to 500 Hz, 2.4 g_{rms} (Tested in accordance with IEC-60068-2-64. Nonoperating test profile exceeds the requirements of MIL-PRF-28800F, Class 3.)

Safety

This product is designed to meet the requirements of the following standards of safety for electrical equipment for measurement, control, and laboratory use:

- EN 61010-1, IEC 61010-1
- UL 61010-1, CSA 61010-1

Note For UL and other safety certifications, refer to the product label, or visit `ni.com/certification`, search by model number or product line, and click the appropriate link in the Certification column.

Electromagnetic Compatibility

This product is designed to meet the requirements of the following standards of EMC for electrical equipment for measurement, control, and laboratory use:

- EN 61326 EMC requirements; Minimum Immunity
- EN 55011 Emissions; Group 1, Class A
- CE, C-Tick, ICES, and FCC Part 15 Emissions; Class A

Note For EMC compliance, operate this device according to printed documentation.

CE Compliance

This product meets the essential requirements of applicable European Directives, as amended for CE marking, as follows:

- 73/23/EEC; Low-Voltage Directive (safety)
- 89/336/EEC; Electromagnetic Compatibility Directive (EMC)

Note Refer to the Declaration of Conformity (DoC) for this product for any additional regulatory compliance information. To obtain the DoC for this product, visit `ni.com/certification`, search by model number or product line, and click the appropriate link in the Certification column.

Waste Electrical and Electronic Equipment (WEEE)

EU Customers At the end of their life cycle, all products *must* be sent to a WEEE recycling center. For more information about WEEE recycling centers and National Instruments WEEE initiatives, visit `ni.com/environment/weee.htm`.

B

Technical Support and Professional Services

Visit the following sections of the National Instruments Web site at `ni.com` for technical support and professional services:

- **Support**—Online technical support resources at `ni.com/support` include the following:
  - **Self-Help Resources**—For answers and solutions, visit the award-winning National Instruments Web site for software drivers and updates, a searchable KnowledgeBase, product manuals, step-by-step troubleshooting wizards, thousands of example programs, tutorials, application notes, instrument drivers, and so on.
  - **Free Technical Support**—All registered users receive free Basic Service, which includes access to hundreds of Application Engineers worldwide in the NI Discussion Forums at `ni.com/forums`. National Instruments Application Engineers make sure every question receives an answer.

    For information about other technical support options in your area, visit `ni.com/services` or contact your local office at `ni.com/contact`.
- **Training and Certification**—Visit `ni.com/training` for self-paced training, eLearning virtual classrooms, interactive CDs, and Certification program information. You also can register for instructor-led, hands-on courses at locations around the world.
- **System Integration**—If you have time constraints, limited in-house technical resources, or other project challenges, National Instruments Alliance Partner members can help. To learn more, call your local NI office or visit `ni.com/alliance`.
- **Declaration of Conformity (DoC)**—A DoC is our claim of compliance with the Council of the European Communities using the manufacturer's declaration of conformity. This system affords the user protection for electronic compatibility (EMC) and product safety. You can obtain the DoC for your product by visiting `ni.com/certification`.

- **Calibration Certificate**—If your product supports calibration, you can obtain the calibration certificate for your product at `ni.com/calibration`.

If you searched `ni.com` and could not find the answers you need, contact your local office or NI corporate headquarters. Phone numbers for our worldwide offices are listed at the front of this manual. You also can visit the Worldwide Offices section of `ni.com/niglobal` to access the branch office Web sites, which provide up-to-date contact information, support phone numbers, email addresses, and current events.

Glossary

Symbol	Prefix	Value
n	nano	10^{-9}
µ	micro	10^{-6}
m	milli	10^{-3}
k	kilo	10^{3}
M	mega	10^{6}
G	giga	10^{9}
T	tera	10^{12}

Symbols

°	Degrees.
Ω	Ohms.
%	Percent.

A

A	Amperes.
AC	Alternating Current.
ASIC	Application-specific integrated circuit.

B

B	Bytes.
backplane	An assembly, typically a printed circuit board, with connectors and signal paths that bus the connector pins.
BIOS	Basic Input/Output System—BIOS functions are the fundamental level of any PC or compatible computer. BIOS functions embody the basic operations needed for successful use of the computer's hardware resources.

C

C	Celsius.
cache	Small portion of high-speed memory used for temporary storage of frequently used data.
CMOS	Complementary Metal Oxide Semiconductor—A type of integrated circuit.
CompactPCI	An adaptation of the PCI specification for industrial and/or embedded applications that require a more robust mechanical form factor than desktop PCI. CompactPCI provides a standard form factor for those applications requiring the high performance of PCI as well as the small size and ruggedness of a rack-mount system.
Controller	An embedded computer module which configures and accesses a series of devices connected to a chassis backplane.

D

DC	Direct Current.
DDR2	Double Data Rate, 2nd generation.
DIMM	Dual In-line Memory Module.
DMA	Direct Memory Access—A method by which data is transferred between devices and internal memory without intervention of the central processing unit.

DRAM	Dynamic RAM (Random Access Memory)—Storage that the computer must refresh at frequent intervals.
DVI-I	Direct Video Interface, Integrated—A video technology enabling the use of both analog and digital video signals.

E

ECP	Extended Capabilities Parallel.
EEPROM	Electronically Erasable Programmable Read Only Memory.
EMC	Electromagnetic Compatibility.
EMI	Electromagnetic interference.
EPP	Enhanced Parallel Port.
expansion ROM	An onboard EEPROM that may contain device-specific initialization and system boot functionality.

F

FCC	Federal Communications Commission.

G

g	1. Grams. 2. A measure of acceleration equal to 9.8 m/s^2.
GPIB	General Purpose Interface Bus (IEEE 488).
g_{rms}	A measure of random vibration—The root mean square of acceleration levels in a random vibration test profile.

H

Hz	Hertz—Cycles per second.

I

I/O	Input/output—The techniques, media, and devices used to achieve communication between machines and users.
IDE	Integrated Drive Electronics—Hard disk and built-in controller.
IEEE	Institute of Electrical and Electronics Engineers.
in.	Inches.
instrument driver	A set of routines designed to control a specific instrument or family of instruments, and any necessary related files for LabWindows/CVI or LabVIEW.
interrupt	A means for a device to request service from another device.
interrupt level	The relative priority at which a device can interrupt.
IRQ#	Interrupt request signal.
ISA	Industry Standard Architecture—The original PC bus architecture, specifically the 16-bit AT bus.

K

kB	Kilobytes of memory.

L

LAN	Local Area Network—Communications network that serves users within a confined geographical area. It is made up of servers, workstations, a network operating system, and a communications link.
LED	Light-emitting diode.

M

m	Meters.
master	A functional part of a PXI device that initiates data transfers on the PXI backplane. A transfer can be either a read or a write.

MB	Megabytes of memory.
MTBF	Mean time between failure.
MTTR	Mean time to repair.

N

NI-488 or NI-488.2	The National Instruments software for GPIB systems.
NI-DAQ	The National Instruments software for data acquisition instruments.
NI-VISA	The National Instruments implementation of the VISA standard—An interface-independent software that provides a unified programming interface for VXI, GPIB, and serial instruments.
NMI	Non-maskable interrupt—High-priority interrupt that cannot be disabled. It is used to report malfunctions such as parity, bus and math coprocessor errors.

P

PCI	Peripheral Component Interconnect—The PCI bus is a high-performance 32-bit or 64-bit bus with multiplexed address and data lines.
PCI Express	Peripheral Component Interconnect Express—A faster, serialized version of the PCI bus.
PCMCIA	Personal Computer Memory Card International Association.
peripheral	Any hardware device connected to a computer, such as a monitor, keyboard, printer, plotter, disk or tape drive, graphics tablet, scanner, mouse, and so on.
POSC	Power On Self Configuration.
PXI	PCI eXtensions for Instrumentation—An open implementation of CompactPCI that adds electrical features that meet the high-performance requirements of instrumentation applications by providing triggering, local buses, and system clock capabilities. PXI also offers two-way interoperability with CompactPCI products.

R

RAM	Random Access Memory—the computer's primary workspace.
RAMDAC	Random Access Memory Digital to Analog Converter—the VGA controller chip that maintains the color palette and converts data from memory into analog signals for the monitor.
resource	Hardware settings used by devices in a computer system, including ISA interrupt level, DMA channel, and I/O address.
RMS	Root mean squared. *See also* g_{rms}.
RTC	Real Time Clock—An electronic circuit that maintains the time of day and also can provide timing signals for timesharing operations.

S

s	Seconds.
slave	A functional part of a PXI device that detects data transfer cycles initiated by a PXI bus master and responds to the transfers when the address specifies one of the device's registers.
SO-DIMM	Small Outline Dual In-line Memory Module.
SRAM	Static RAM—A memory chip that requires power to hold its content. It does not require refresh circuitry as a dynamic RAM chip, but it does take up more space and uses more power.

U

USB	Universal Serial Bus.

V

V	Volts.
VGA	Video Graphics Array—The minimum video display standard for all PCs.

W

W	Watts.

Index

A

Advanced Setup menu, 2-6
ATA-100 IDE logic block, 1-4

B

BIOS
- checking settings, 4-1
- flashing new BIOS, 4-5
- setup
  - Advanced Setup menu, 2-6
  - Boot Setup menu, 2-12
  - entering, 2-5
  - Exiting BIOS Setup menu, 2-12
  - Integrated Peripherals menu, 2-7
  - Main Setup menu, 2-6
  - PXI Setup menu, 2-10
    - Per-Slot Device Settings, 2-10

boot options, configuring controller, 4-2
Boot Setup menu, 2-12

C

calibration certificate (NI resources), B-2
CD-ROM drive, installing software from, 4-4
CE compliance specifications, A-4
chipset 945GMCH, 1-4
chipset ICH7M, 1-4
CMOS
- clearing contents (figure), 2-14, 5-3
- setting back to default, 5-2

COM1 connector
- connector locations and pinout (figure), 3-5
- connector signals (table), 3-5

common configuration questions
- boot options, 4-1
- cables and connections, 4-2
- chassis configuration, 2-17
  - figure, 2-17
- driver installation, 4-3
- general questions, 4-1
- PXI configuration, 4-6
- upgrade information, 4-4

CompactPCI specification, 1-1
configuration, common questions
- boot options, 4-1
- cables and connections, 4-2
- chassis configuration, 2-17
  - figure, 2-17
- driver installation, 4-3
- general questions, 4-1
- PXI configuration, 4-6
- upgrade information, 4-4

connectors
- COM1 connector and signals, 3-5
- DVI-I connector and signals, 3-3
- Ethernet connector and signals, 3-6
- ExpressCard connector and signals, 3-12
- GPIB connector and signals, 3-11
- parallel port connector and signals, 3-7
- peripheral expansion overview (table), 3-1
- trigger connector and signals, 3-10
- Universal Serial Bus (USB) connector and signals, 3-9

conventions used in the manual, *vii*

D

data storage, 3-14
DDR SO-DIMMs
- installing, 2-19, 4-4
  - figure, 2-20, 4-5

DDR2 SO-DIMMs
from National Instruments
(note), 2-19, 4-4
Declaration of Conformity (NI resources), B-1
diagnostic tools (NI resources), B-1
directories and files installed on hard drive, 2-16
documentation
conventions used in manual, *vii*
how to use this documentation set, *vii*
NI resources, B-1
related documentation, *viii*
DRIVE LED, 3-14
drivers, 2-16
installation
GPIB (IEEE 488.2), 4-3
video, 4-3
NI resources, B-1
obtaining latest drivers, 4-5
DVI-I
connector signals (table), 3-3
location and pinout (figure), 3-3
overview (table), 3-1

E

electrical specifications, A-1
electromagnetic compatibility, A-3
Ethernet, connector
location and pinout (figure), 3-6
signals (table), 3-6
examples (NI resources), B-1
Exiting BIOS Setup menu, 2-12
ExpressCard, 2-21, 3-12
connector location and pinout
(figure), 3-12
installing a module, 2-21
removing a module, 2-22

F

files and directories installed on hard drive, 2-16
floppy drive, using external floppy drive, 4-5
front panel
connectors, 3-1
dimensions, 3-2
features, 3-14
functional overview of NI PXI-8106, 1-2

G

GPIB (IEEE 488.2), 3-11
connector location and pinout
(figure), 3-11
connector signals (table), 3-11, 3-13
driver installation, 4-3

H

hard drive, 3-14
files and directories installed on, 2-16
recovery, 2-20
help, technical support, B-1

I

IDE controller, using SCSI hard drive in addition, 4-1
IEEE 488.2, 3-11
images directory, 2-16
installation
See also configuration
injector/ejector handle position
(caution), 2-2
NI PXI-8106 installed in a PXI chassis
(figure), 2-4
procedure, 2-1
removing NI PXI-8106 from PXI
chassis, 2-4

removing protective screw caps (figure), 2-2
instrument drivers (NI resources), B-1
Integrated Peripherals menu, 2-7

K

keyboard, plugging PS/2 mouse and keyboard into controller, 4-2
KnowledgeBase, B-1

L

LabVIEW, 1-5
LabVIEW RT configuration switches, 2-14, 2-15
LabWindows/CVI, 1-5
LEDs, front panel LEDs, 3-14, 4-1
Linux support, 1-6
LPT cable, connecting to NI PXI-8106, 4-3

M

Main Setup menu, 2-6
manuals directory, 2-16
mating connector
GPIB (IEEE 488.2), 3-11
parallel port, 3-7
Measurement Studio, 1-5
modular instruments, 1-5
mouse, plugging PS/2 mouse and keyboard into controller, 4-2
multichassis configuration in MAX (figure), 2-17

N

National Instruments
software, 1-4
support and services, B-1
NI PXI-8106
benefits of PXI, 1-1
BIOS setup, 2-5
block diagram, 1-3
connectors, 3-1
COM1 connector and signals, 3-5
DVI-I connector and signals (table), 3-3
ExpressCard connector and signals, 3-12
GPIB (IEEE 488.2) connector and signals, 3-11
parallel port connector and signals, 3-7
trigger connector and signals, 3-10
Universal Serial Bus (USB) connector and signals, 3-9
data storage, 3-14
front panel
features, 3-14
LEDs, 4-1
system reset pushbutton, 3-14
front panel dimensions, 3-2
functional overview, 1-2
hard drive recovery, 2-20
installing DDR SO-DIMMs (figure), 2-20, 4-5
installing in a PXI chassis, 2-1
figure, 2-4
logic blocks, 1-4
peripheral expansion overview (table), 3-1
PXI trigger connectivity, 2-16
removing from a PXI chassis, 2-4
software, 1-4
specifications, A-1
troubleshooting, 5-1
upgrading RAM, 2-19, 4-4
NI support and services, B-1
NI-DAQmx, 1-5
NI-VISA, 1-6

O

operating environment
specifications, A-1, A-2
os directory, 2-16
OS installation from CD-ROM, 2-21

P

parallel port
connector location and pinout (figure), 3-7
connector signals (table), 3-8
overview (table), 3-1
PCI bus, standard for desktop computer designs, 1-1
peripheral expansion overview (table), 3-1
Per-Slot Device Settings menu, 2-10
physical specifications, A-1
POWER OK LED, 3-14
programming examples (NI resources), B-1
protective screw caps, removing (figure), 2-2
PS/2, plugging PS/2 mouse and keyboard into controller, 4-2
PXI connectors, function (logic block), 1-4
PXI features, 2-16
PXI Setup menu, 2-10
Per-Slot Device Settings, 2-10
PXI trigger connectivity, 2-16
PXI-8220/PXI-8221, using NI PXI-8106 with, 4-6
pxisys.ini file, 2-17

R

RAM
DDR2 SO-DIMMs from National Instruments (note), 2-19, 4-4
upgrading, 2-19, 4-4
related documentation, *viii*

S

safety specifications (table), A-3
serial port, 3-1
See also COM1 connector
shock and vibration specifications, A-3
socket 479 1 CPU, 1-4
SO-DIMM logic block, 1-4
software
See also drivers
installed on your hard drive, 2-16
installing from CD-ROM, 4-4
LabVIEW, 1-5
LabWindows/CVI, 1-5
Measurement Studio, 1-5
National Instruments software, 1-4
NI resources, B-1
NI-DAQmx, 1-5
NI-VISA, 1-6
specifications
CE compliance, A-4
electrical, A-1
electromagnetic compatibility, A-3
operating environment, A-1, A-2
physical, A-1
safety, A-3
shock and vibration, A-3
storage environment, A-2
Waste Electrical and Electronic Equipment (WEEE), A-4
storage environment specifications, A-2
super I/O logic block, 1-4
support, technical, B-1
switches
LabVIEW RT configuration, 2-14
figure, 2-15
system CMOS, 2-13
system reset pushbutton, 3-14

T

technical support, B-1
training and certification (NI resources), B-1
trigger, 3-10, 4-6
    connector location and pinout (figure), 3-10
    connector signals (table), 3-10
troubleshooting
    CMOS reset, 5-2
    controller does not boot, 5-1
    damaged module, 5-2
    NI resources, B-1
    video display, 5-2

U

Universal Serial Bus (USB), 3-1, 3-9
    connector function, 1-4
    connector location and pinout (figure), 3-9
    connector signals (table), 3-9
    overview (table), 3-1

V

video, 3-1
    driver installation, 4-3

W

Waste Electrical and Electronic Equipment (WEEE) specifications, A-4
Web resources, B-1

Y

Y-splitter cable
    figure, 4-2
    using mouse and keyboard without, 4-3
    using with PS/2 mouse and keyboard, 2-3