REV	DESCRIPTION	DRAWN	DATE
		APPROVED	DATE

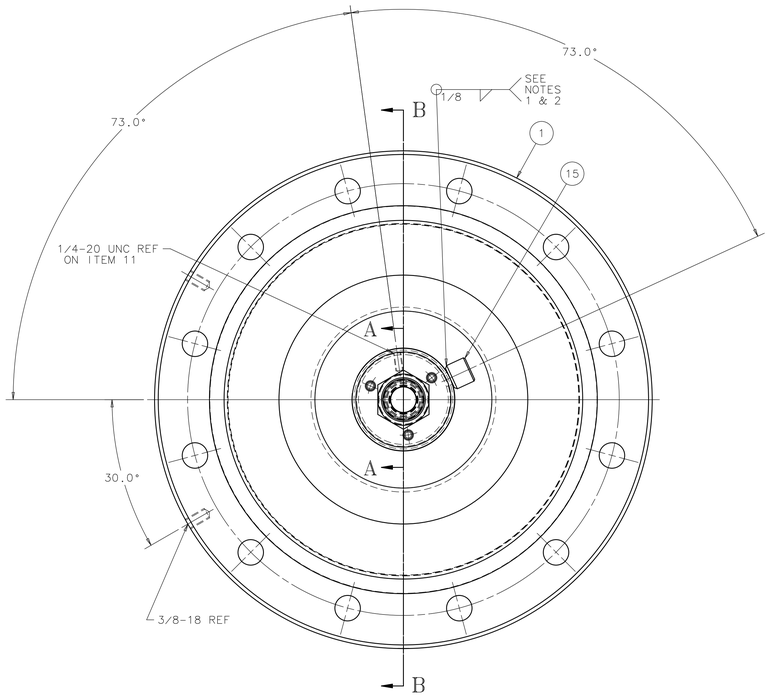

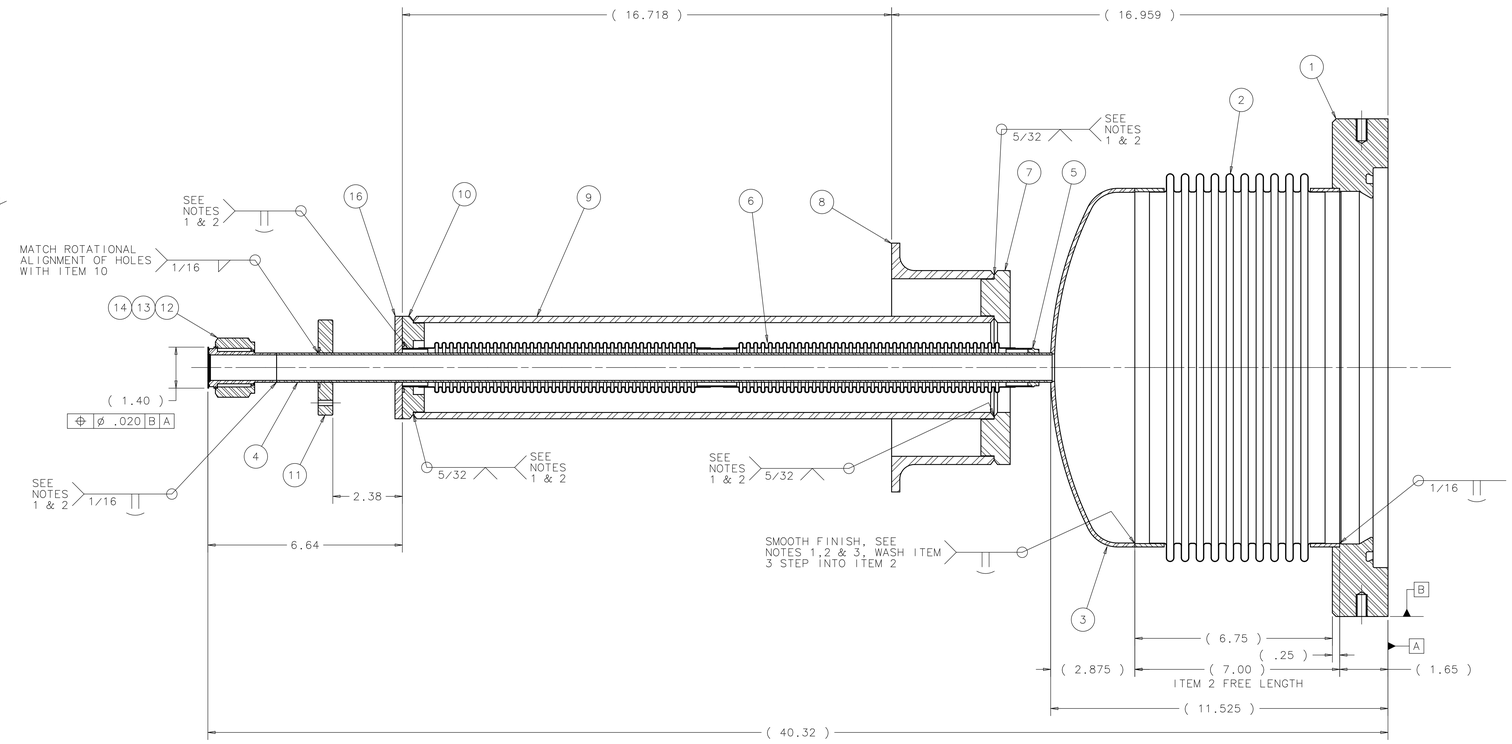

SECTION B-B

SCALE 2:1

EST. WEIGHT = 93.81 LBS.

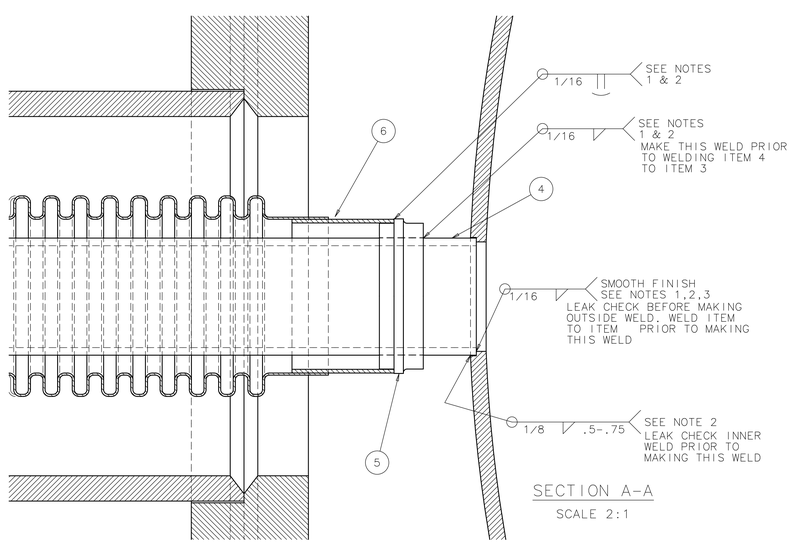

SECTION A-A

SCALE 2:1

ITEM	PART NO.	DESCRIPTION OR SIZE	QTY.
16	MB-444882	FELT WASHER	1
15	4565T31	PIPE FITTING, 1/4" NPS 304 S.S. McMASTER CARR OR EQUAL FITS 3" IPS	1
14	COML	1" VCR GASKET, UNPLATED,NON-RETAINED, P/N CU-16-VCR-2-VS	1
13	COML	1" VCR FEMALE NUT P/N SS-16-VCR-1	1
12	COML	1" VCR MALE NUT, P/N SS-16-VCR-4	1
11	MB-444787	PLATE - BELLOWS	1
10	MB-444786	FLANGE TOP OUTER BELLOWS - 2	1
9	MB-466182	PIPE, ø3 NPS - OUTER BELLOWS	1
8	MB-444785	PIPE STUB END, SHORTENED	1
7	MB-444784	ADAPTER RING, 6 X 3 SCH. 40 PIPE	1
6	MB-466175	BELLOWS ASSY, FILE J4528	1
5	MB-444783	ADAPTER RING-BELLOWS TO 1" TUBE	1
4	COML	TUBE 1.00 X .065 WALL X 26.50 LONG, SEAMLESS COLD DRAWN, 316L SST, BRIGHT ANNEALED, PER SPEC. A269. I.D. TO 20 MICROINCH FINISH.	1
3	MC-466180	HEAD - EXPANSION CHAMBER - HPV	1
2	MD-466201	BELLOWS ASSY - HPV	1
1	MD-466179	FLANGE TOP - GLASS JAR - HPV	1

PARTS LIST

UNLESS OTHERWISE SPECIFIED					
.XX	.XXX	ANGLES	ORIGINATOR	R.RUCINSKI	21-AUG-2008
± .03	± ---	± 1°	DRAWN	T.SPERRY	21-AUG-2008
			CHECKED	J.RAUCH	08-SEP-2008
			APPROVED	R.RUCINSKI	08-SEP-2008

1. BREAK ALL SHARP EDGES .015 MAX.
2. DO NOT SCALE DRAWING.
3. DIMENSIONS BASED UPON ASME Y14.5M-1994
4. MAX. ALL MACH. SURFACES 125
5. DRAWING UNITS: U.S. INCH

USED ON: MD-466178

MATERIAL: SEE PARTS LIST ABOVE

FERMI NATIONAL ACCELERATOR LABORATORY
UNITED STATES DEPARTMENT OF ENERGY

MECHANICAL/DETECTORS
COUPP BUBBLE CHAMBER
HPV-EXPANSION CHAMBER WELD-30L

SCALE	DRAWING NUMBER	SHEET	REV
1:2 & AS NOTED	9213.400-ME-466185	1 OF 1	

CREATED WITH : Ideas12NXSeries GROUP: PPD/MECHANICAL DEPARTMENT

NOTICE: IMAGE OBTAINED FROM FERMILAB WEB SITE

This information is provided for REFERENCE use only. Not for MANUFACTURE, or DESIGN INFORMATION. All information contained in this document represents work sponsored by an agency of the U.S. Government. Neither the U.S. Government nor any agency thereof, nor Universities Research Association, Inc., nor any of their employees or officers, makes any warranty, express or implied, or assumes any legal liability or responsibility for the accuracy, completeness, or usefulness of any information, apparatus, product or process disclosed, or represents that its use would not infringe privately owned rights.

NOTES

1) ALL WELDING TO BE DONE USING NON-THORIATED ELECTRODES, PURE TUNGSTEN, CERIATED TUNGSTON OR LATHANATED TUNGSTEN ELECTRODES ARE ACCEPTABLE.

2) ALL WELDS TO BE VACUUM LEAK TIGHT. LEAK TEST: NO LEAK SHALL BE DETECTABLE ON THE MOST SENSITIVE SCALE OF A HELIUM LEAK DETECTOR WITH A MINIMUM SENSITIVITY OF 10 ATM.CC/SEC.

3) PROVIDE SUPPORT CAPABLE OF 1900 LBS COMPRESSIVE LOADING INSIDE DISHED HEAD TO PREVENT BELLOWS COLLAPSE DURING LEAK CHECK.