REV	DESCRIPTION	DRAWN	DATE
		APPROVED	DATE

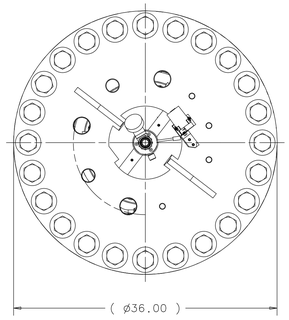

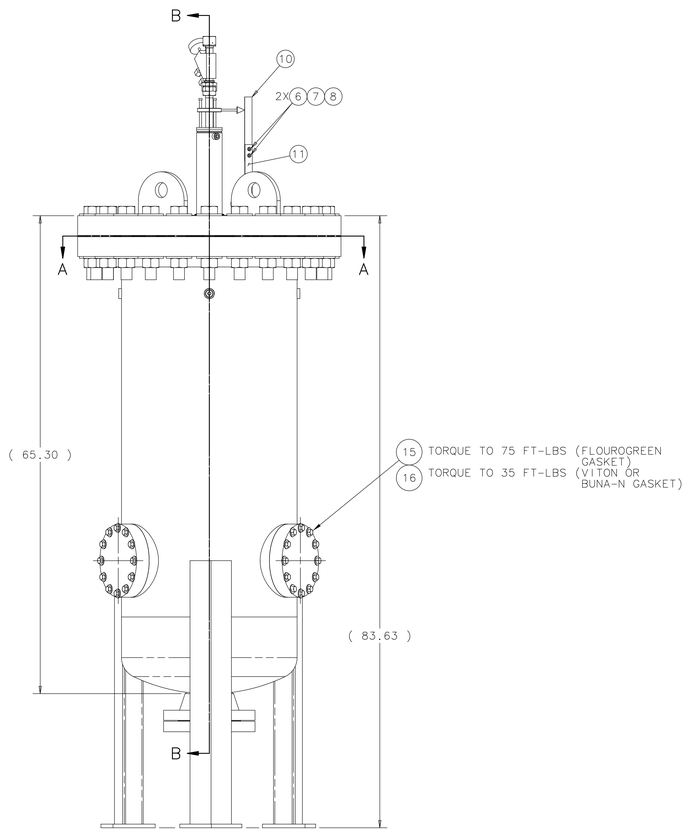

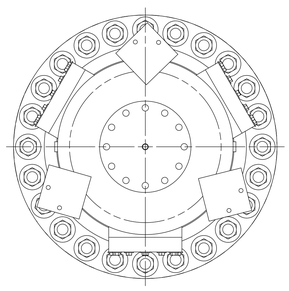

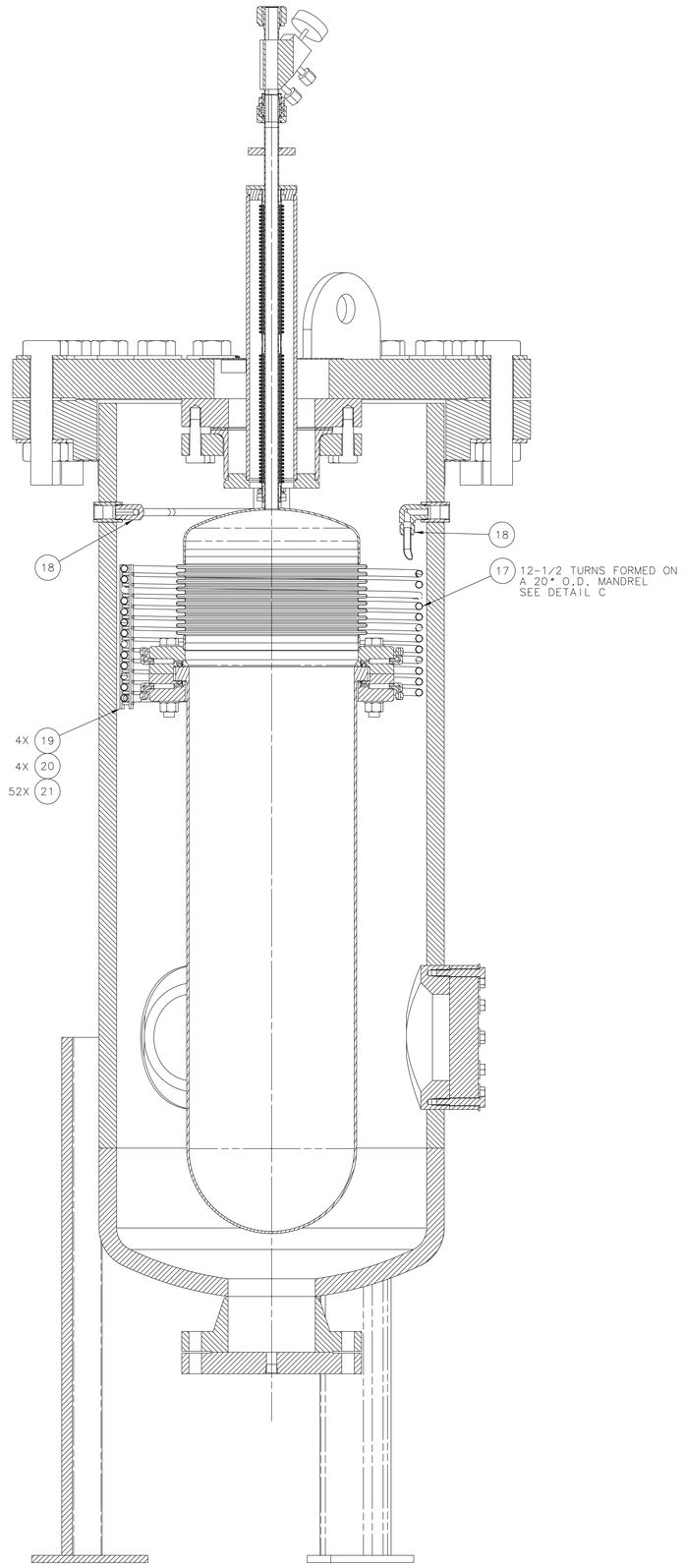

SECTION B-B
SCALE 1:4

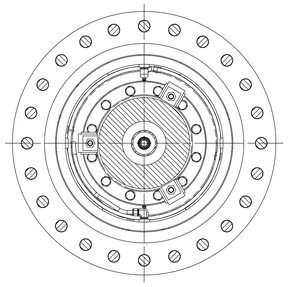

SECTION A-A

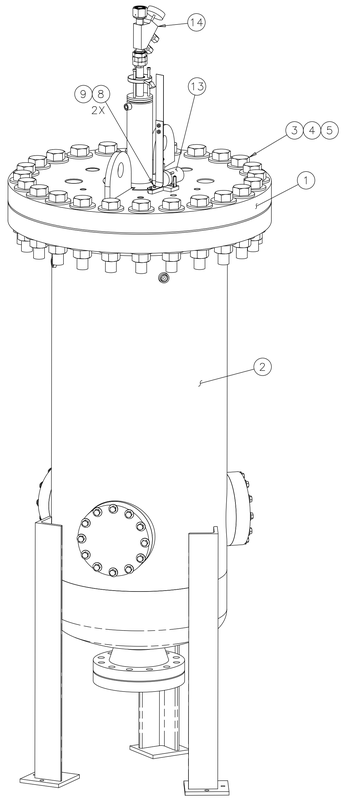

ISOMETRIC

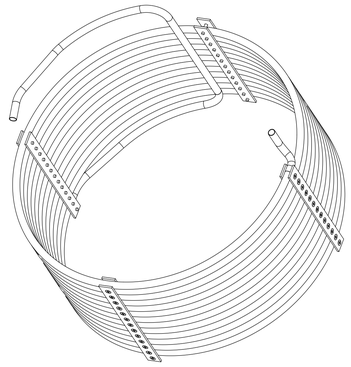

DETAIL C
ITEMS 17, 19, 20 & 21
SCALE 1/4

EST. WEIGHT = 3590.0 LBS.

ITEM	PART NO.	DESCRIPTION OR SIZE	QTY.
21	COML	SCREW, FLAT HEAD SKT HD CAP, 10-32UNC x 3/4" LG, 18-8 S.S., McMASTER-CARR P/N 92210A304	52
20	MB-466192	TUBE RESTRAINT THREADED HOLE	4
19	MB-466191	TUBE RESTRAINT CSK THRU HOLE	4
18	COML	BRASS TUBE FITTING, MALE ELBOW, 1/2" TUBE O.D. x 3/4" MALE NPT, SOAGELOK P/N B-810-2-12	2
17	1065-0075	TUBING, 1/2" O.D. x .032" WALL, SOFT COPPER, McMASTER-CARR P/N 5174K36, APPROX 68 FT LG	AS REQ'D
16	1218-0700	WASHER, FLAT, SCREW SIZE 1/2, 18-8 S.S.	36
15	1226-0650	BOLT, HEX HD, 1/2-13 x3" LG, 18-8 S.S.	36
14	COML	VALVE-HF1075-FSM-MS-PC2FSM-F CARTEN CONTROLS CORP.	1
13	COML	TRANSDUCER-LINEAR POSN,UNIMEASURE CO., JX-PA-3.8-N11-21S-31N	1
12	COML	SCREW-RDH SLTD #6-32 X 1-3/4"LONG 18-8 SST., MCMASTER#91783A158	2
11	MB-444781	RULE EXTENDER	1
10	MB-444782	RULE - 30L VESSEL	1
9	COML	SCREW-CAP #10-24 X 3/8" LONG 18-8 SST, MCMASTER #92196A240	2
8	1218-105000	WASHER-LOCK, #10, 18-8 SST.	4
7	1210-060000	NUT - 10-24, 18-8 SST	2
6	COML	SCREW 10-24 X 3/8", 18-8 SST PAN HD, PHH., MCMASTER #91772A240	2
5	COML	WASHER - FLAT; 1-1/2"ID X 3.00"OD 18-8 SST, MCMASTER #98900A318	48
4	COML	NUT; 1-1/2"-12 UNRF 18-8 SST., MCMASTER #91845A265	24
3	COML	BOLT 1.5-12 X 9.00" UNRF 18-8 SST, 24" ASA FLANGE SUPPLIER	24
2	ME-444753	COUPP PRESSURE VESSEL RE-WORK	1
1	MD-466178	HPV-INNER VESSEL ASSY - 30L	1

PARTS LIST

UNLESS OTHERWISE SPECIFIED			ORIGINATOR	R.RUCINSKI	28-AUG-2008
.XX	.XXX	ANGLES	DRAWN	T.SPERRY	28-AUG-2008
± .02	± ••	± ••	CHECKED	J.RAUCH	08-SEP-2008
			APPROVED	R.RUCINSKI	08-SEP-2008

1. BREAK ALL SHARP EDGES .015 MAX.
2. DO NOT SCALE DRAWING.
3. DIMENSIONS BASED UPON ASME Y14.5M-1994
4. MAX. ALL MACH. SURFACES
5. DRAWING UNITS:U.S.INCH

USED ON

MATERIAL
SEE PARTS LIST ABOVE

FERMI NATIONAL ACCELERATOR LABORATORY
UNITED STATES DEPARTMENT OF ENERGY

MECHANICAL/DETECTORS
COUPP BUBBLE CHAMBER
COUPP 30L PRESSURE VESSEL-HPV

SCALE	DRAWING NUMBER	SHEET	REV
1:8 & AS NOTED	9213.400-ME-466193	1 OF 1	

CREATED WITH : Ideas12NXSeries GROUP: PPD/MECHANICAL DEPARTMENT

NOTICE: IMAGE OBTAINED FROM FERMILAB WEB SITE
This information is provided for REFERENCE use only.
Not for MANUFACTURE, or DESIGN INFORMATION.
All information contained in this document represents work sponsored by an agency of the U.S. Government.
Neither the U.S. Government nor any agency thereof, nor Universities Research Association, Inc., nor any of their employees or officers, makes any warranty, express or implied, or assumes any legal liability or responsibility for the accuracy, completeness, or usefulness of any information, apparatus, product or process disclosed, or represents that its use would not infringe privately owned rights.