REV	DESCRIPTION	DRAWN / APPROVED	DATE
A	ADDED ITEM 22 & 23; UPDATED TO REFLECT COIL HANGERS	J.TILLMAN	02/25/09

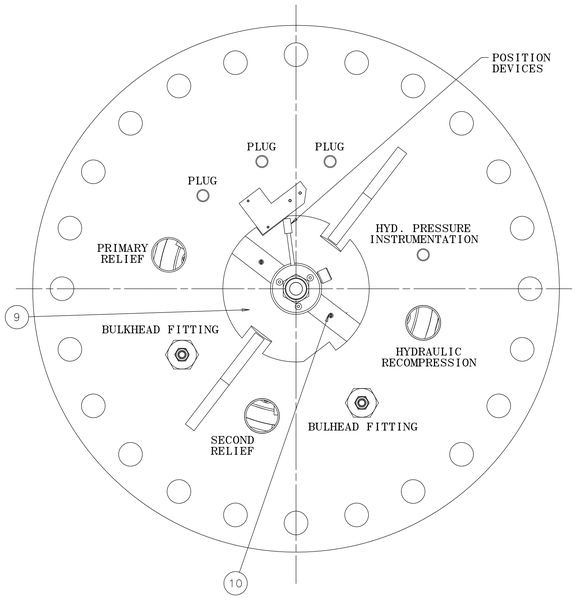

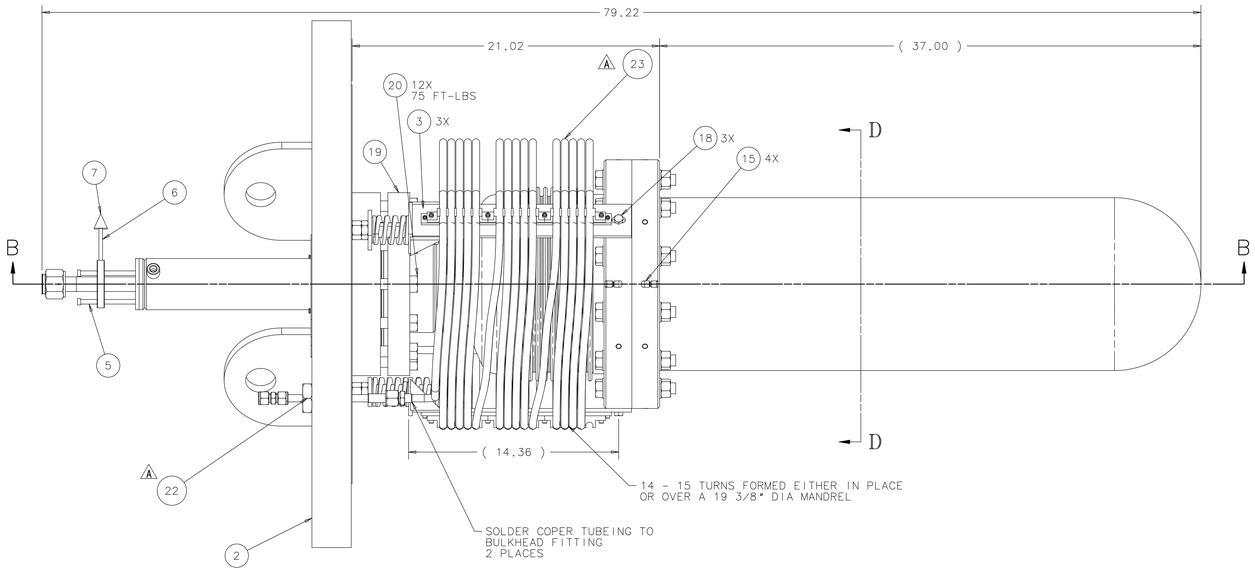

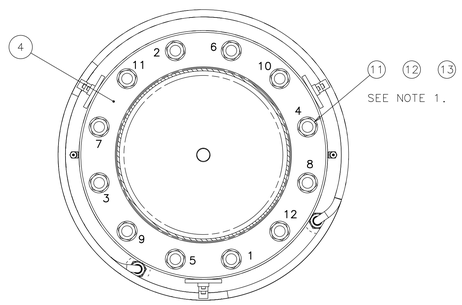

SECTION D-D

TORQUEING SEQUENCE
SIMPLIFIED VIEW
SCALE 1/8

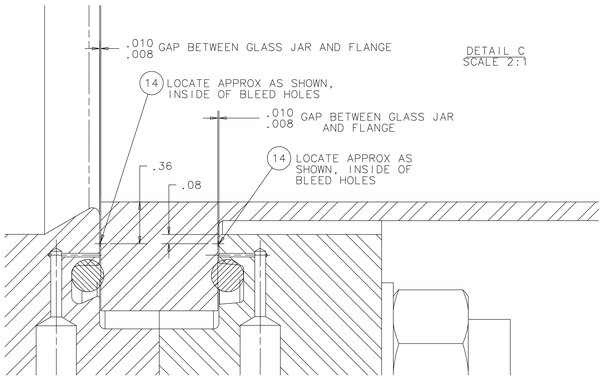

DETAIL C
SCALE 2:1

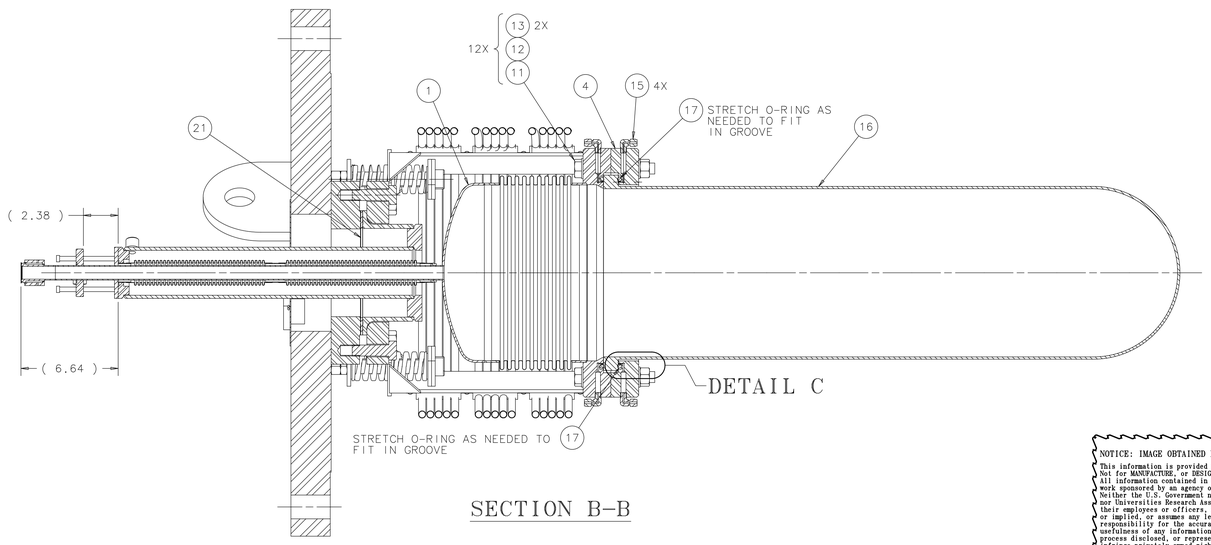

SECTION B-B

NOTES:

1. TORQUE TO 75 FT LBS. AFTER HAND TIGHTENING, TORQUE BOLTS TO 15 FT-LBS, 40 FT-LBS, 60 FT-LBS, AND FINALLY 75 FT-LBS.
2. ASSEMBLY DRAWN AND DIMENSIONED AT "NEUTRAL" FREE BELLOWS LENGTH.

ITEM	PART NO.	DESCRIPTION OR SIZE	QTY.
23	1065-0075	TUBING, 1/2" O.D. X .032 WALL SOFT COPPER; APRX 68 FT LG	
22	MB-466334	BULKHEAD FITTING	2
21	COML	GASKET, RING FLANGE, METAL-REINFORCED, 5" PIPE SZ, McMASTER-CARR #44955K486	1
20	1226-0750	SCREW, CAP, HEX HD, TYPE 18-8 S.S., 3/4-10UNC-2A x 2-1/2" LG	12
19	COML	FLANGE, 2-PIECE BACKUP, 6" SZ, CLASS 300 BOLT HOLE PATTERN, 316L S.S., MARZOLF #1262-300-RIPS	1
18	COML	SCREW, CAP, HEX HD, TYPE 18-8 S.S., CLASS 2A THD, 3/8-16UNC x 3/4 LG	3
17	COML	O-RING, .275 DIA, 12.475 I.D., PARKER #2-454, VITON	2
16	MC-466176	COUPP HIGH PURITY GLASS VESSEL	1
15	COML	TUBE FTG ELBOW, 1/8" TUBE x 1/8" MALE NPT, SST, SWAGELOK #SS-200-2-2 OR EQUIV	4
14	COML	WIRE, GOLD, .031 DIA x 12.15 DIA RING, SCIENTIFIC INSTR. SERVICES, CUSTOM	2
13	COML	FLAT WSHR, ZINC PLATED, 3/4 SCREW SIZE, McMASTER-CARR #90126A036	24
12	COML	SCREW, CAP, HEX HD, 3/4-16UNF x 5" LG, ZINC PLATED, McMASTER-CARR #91247A485	12
11	COML	NUT, HEX, 3/4-16UNF, ZINC PLATED, GRADE 5, McMASTER-CARR #95462A540	12
10	1226-166000	PAN HD SCREW 18-8 SS, NO8-32UNC X .38 LG	2
9	MB-444900	COVER - CENTER LID HOLE	2
8	—		
7	MB-444822	ARROW POSITION INDICATOR	1
6	MB-444821	ROD - ARROW EXTENSION	1
5	90298A599	SHOULDER SCREW, 18-8 SS, Ø5/16 x 4" LG, MCMASTER-CARR	3
4	MD-444605	FLANGE BOTTOM GLASS JAR	1
3	MC-466184	HPV-SPRING LOADED SUPPORT HANGER	3
2	MD-444754	TOP FLANGE PORTING WELDMENT	1
1	ME-466185	HPV-EXPANSION CHAMBER WELDMENT	1

PARTS LIST

UNLESS OTHERWISE SPECIFIED			ORIGINATOR	R.RUCINSKI	21-AUG-2008
.XX	.XXX	ANGLES	DRAWN	T.SPERRY	21-AUG-2008
± .02	± ---	± ---	CHECKED	J.RAUCH	08-SEP-2008
			APPROVED	R.RUCINSKI	08-SEP-2008

1. BREAK ALL SHARP EDGES .015 MAX
2. DO NOT SCALE DRAWING.
3. DIMENSIONS BASED UPON ASME Y14.5M-1994
4. MAX. ALL MACH. SURFACES 125
5. DRAWING UNITS: U.S. INCH

USED ON: ME-466193

MATERIAL: SEE PARTS LIST ABOVE

FERMI NATIONAL ACCELERATOR LABORATORY
UNITED STATES DEPARTMENT OF ENERGY

MECHANICAL/DETECTORS
COUPP BUBBLE CHAMBER
HPV-INNER VESSEL ASSEMBLY - 30L

SCALE	DRAWING NUMBER	SHEET	REV
1:2 & AS NOTED	9213.400-ME-466178	1 OF 1	A

CREATED WITH : Ideas12NXSeries GROUP: PPD/MECHANICAL DEPARTMENT

NOTICE: IMAGE OBTAINED FROM FERMILAB WEB SITE
This information is provided for REFERENCE use only. Not for MANUFACTURE, or DESIGN INFORMATION. All information contained in this document represents work sponsored by an agency of the U.S. Government. Neither the U.S. Government nor any agency thereof, nor Universities Research Association, Inc., nor any of their employees or officers, makes any warranty, express or implied, or assumes any legal liability or responsibility for the accuracy, completeness, or usefulness of any information, apparatus, product or process disclosed, or represents that its use would not infringe privately owned rights.