REV	DESCRIPTION	DRAWN	DATE
		APPROVED	DATE

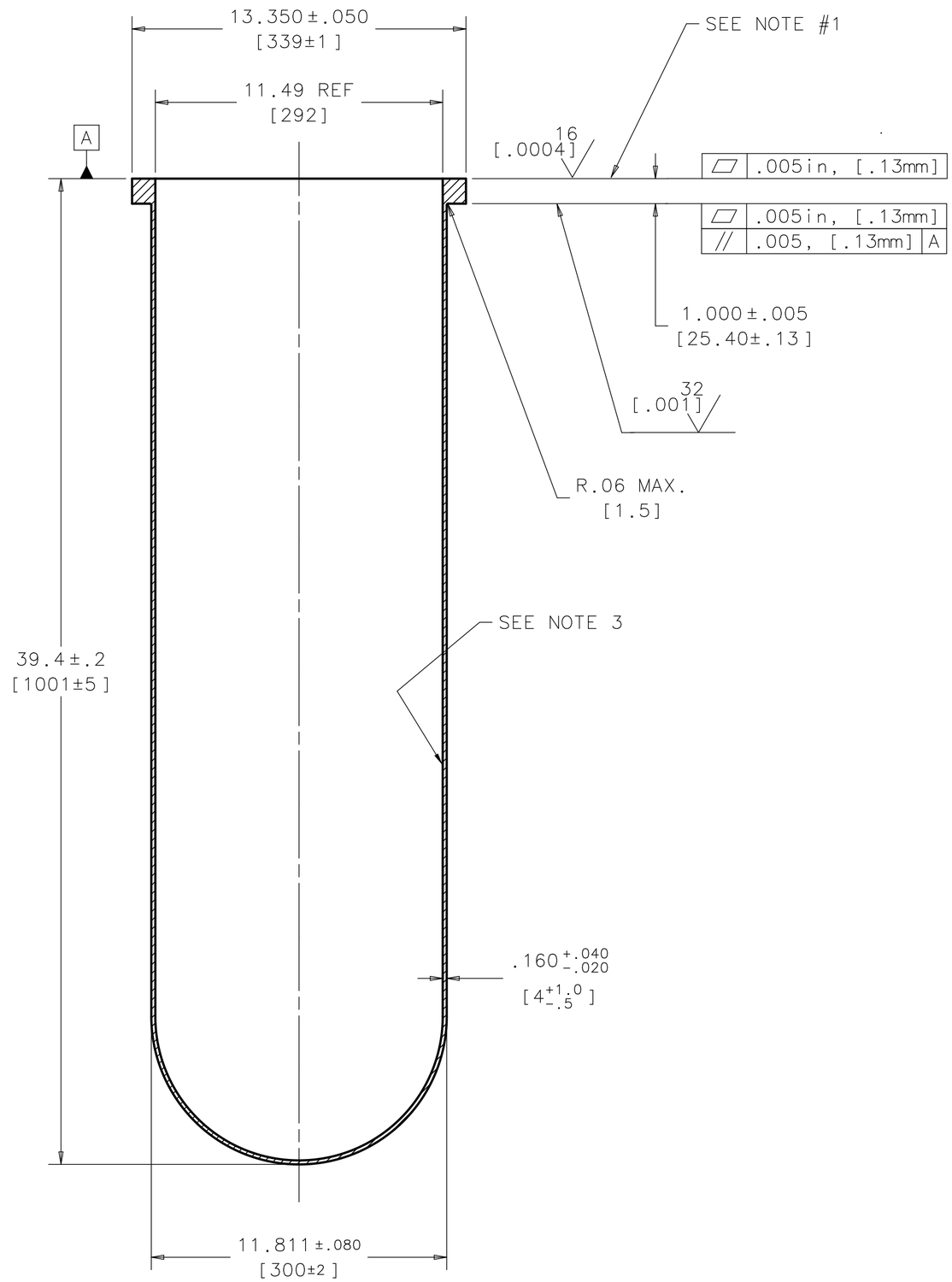

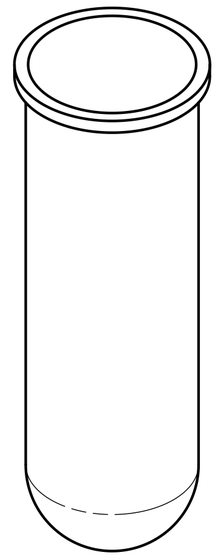

ISOMETRIC
SCALE 1/8

EST. WEIGHT = 26.24 LBS.

NOTES:

1. THIS SURFACE WILL BE A SEALING SURFACEFOR A GOLD WIRE SEAL. IT MUST BE SMOOTH AND FREE OF CRATERS, MACHINE MARKS ANDSCRATCHES. OTHER SIDE OF FLANGE IS NOTAS CRITICAL. PLACE SURFACE IMPERFECTIONS AND MACHINING MARKS (IF ANY) TO OTHER SIDE OF FLANGE.
2. DIMENSIONS IN [] ARE IN MILLIMETERS.
3. THIS SURFACE TO BE SMOOTH AS FORMED. 16 MICRO INCH OR BETTER.

NOTICE: IMAGE OBTAINED FROM FERMILAB WEB SITE

This information is provided for REFERENCE use only.
Not for MANUFACTURE, or DESIGN INFORMATION.
All information contained in this document represents work sponsored by an agency of the U.S. Government.
Neither the U.S. Government nor any agency thereof, nor Universities Research Association, Inc., nor any of their employees or officers, makes any warranty, express or implied, or assumes any legal liability or responsibility for the accuracy, completeness, or usefulness of any information, apparatus, product or process disclosed, or represents that its use would not infringe privately owned rights.

UNLESS OTHERWISE SPECIFIED			ORIGINATOR	R.RUCINSKI	20-AUG-2008
.XX	.XXX	ANGLES	DRAWN	T.SPERRY	20-AUG-2008
± --	± --	± --	CHECKED	J.RAUCH	08-SEP-2008
1. BREAK ALL SHARP EDGES MAX.			APPROVED	R.RUCINSKI	08-SEP-2008
2. DO NOT SCALE DRAWING. 3. DIMENSIONS BASED UPON ASME Y14.5M-1994 4. MAX. ALL MACH. SURFACES √			USED ON	MD-466178	
5. DRAWING UNITS: U.S. INCH			MATERIAL	SYNTHETICALLY FUSED SILICA (SEE PURCHASE SPECIFICATION)	

FERMI NATIONAL ACCELERATOR LABORATORY
UNITED STATES DEPARTMENT OF ENERGY

MECHANICAL/DETECTORS
COUPP BUBBLE CHAMBER
COUPP HIGH PURITY QUARTZ VESSEL

SCALE	DRAWING NUMBER	SHEET	REV
1:4 & AS NOTED	9213.400-MC-466176	1 OF 1	

CREATED WITH : Ideas12NXSeries | GROUP: PPD/MECHANICAL DEPARTMENT