COUPP 4-kg Bubble Chamber Technical Overview

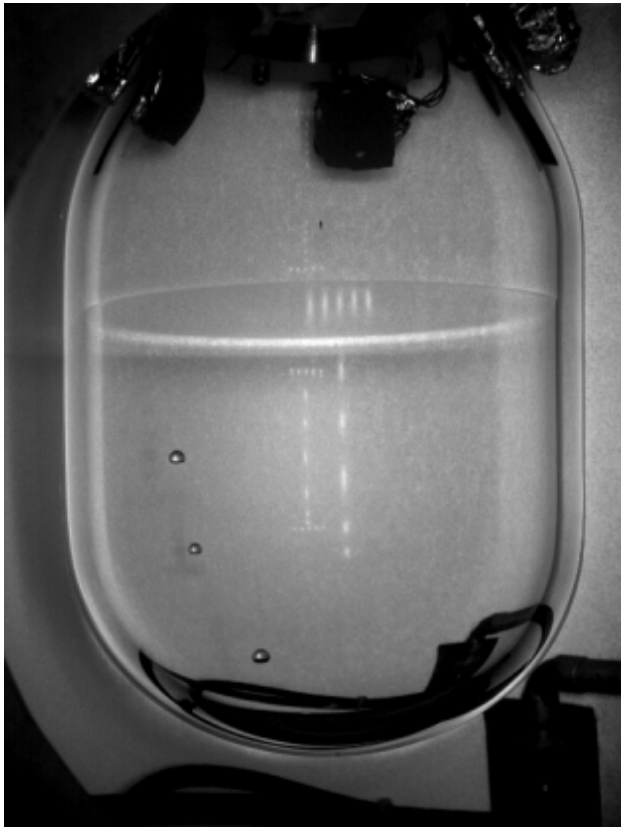

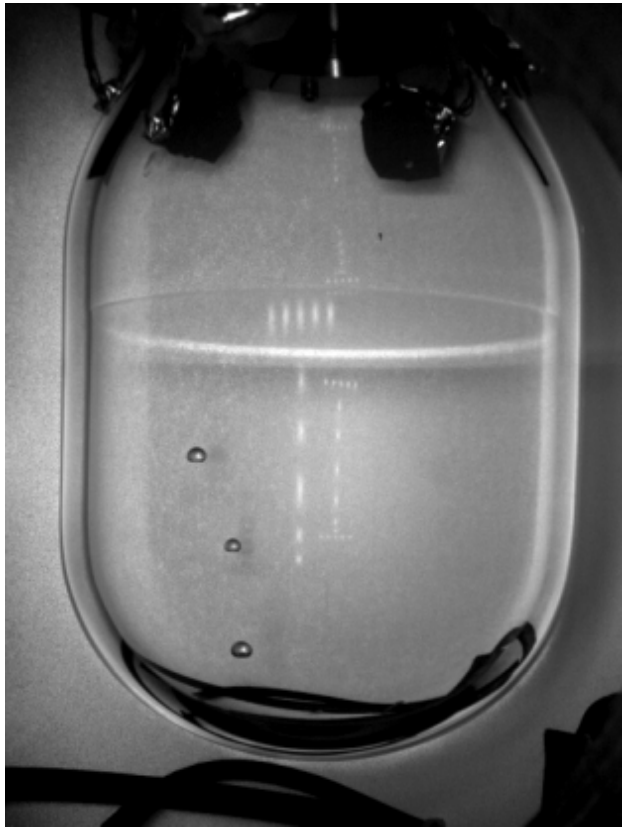

The COUPP Collaboration

University of Chicago

Juan Collar (PI, spokesperson), C. Eric Dahl, Drew Fustin, Matthew Szydagis

Indiana University South Bend

Ed Behnke, Joshua Behnke, J. Henry Hennefeld, Ilan Levine (PI), Andrea Palenchar, Tina Shepherd, Brendan Sweeney

Fermilab

Steve Brice, Dan Broemmelsiek, Peter Cooper, Mike Crisler, Jeter Hall, Martin Hu, Erik Ramberg, Andrew Sonnenschein, Fermilab Engineers and Technicians

Kavli Institute for Cosmological Physics AT THE UNIVERSITY OF CHICAGO

Fermilab

The Bubble Chamber

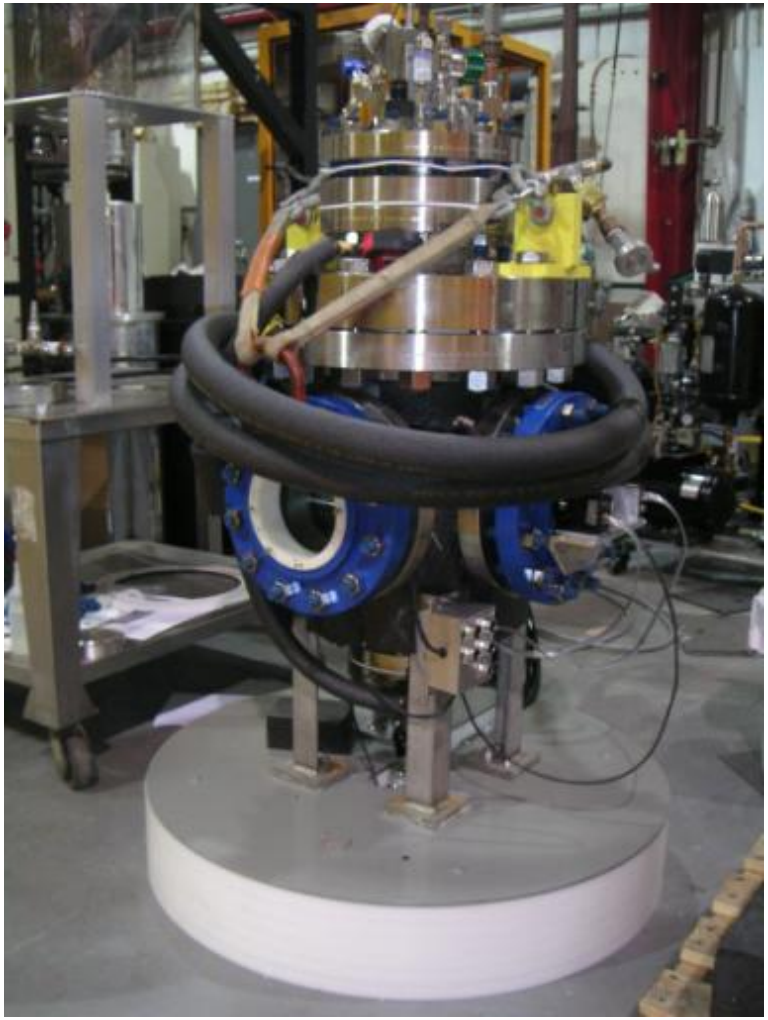

Code Stamped Pressure Vessel

Pressure Rated 6” Viewports

Mechanical Engineering Notes
Pressure Vessel Notes

Link to engineering info:
http://coupp-docdb.fnal.gov:8080/cgi-bin/ShowDocument?docid=57

Inner Vessel Assembly

- Synthetic Silica Inner Vessel
- Hangs from Bellows
- Plumbing connections to pressure vessel top flange
- Instrumentation Feed-through
- Wiring break-out box

Inner Vessel Assembly

Pressure Vessel

expand

Inner Vessel Assembly

Pressure Vessel

compress

COUPP 4kg Installation

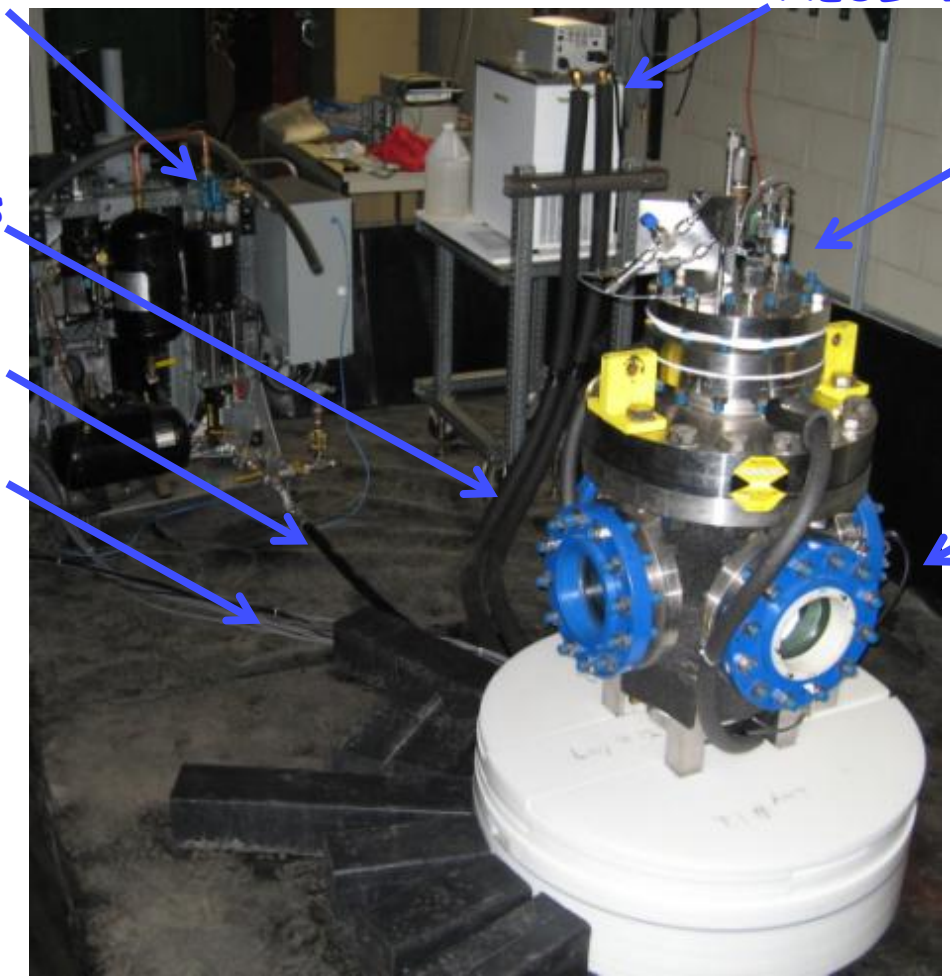

COUPP CF_3I Handling

Need s.s. tubing for SNOLAB

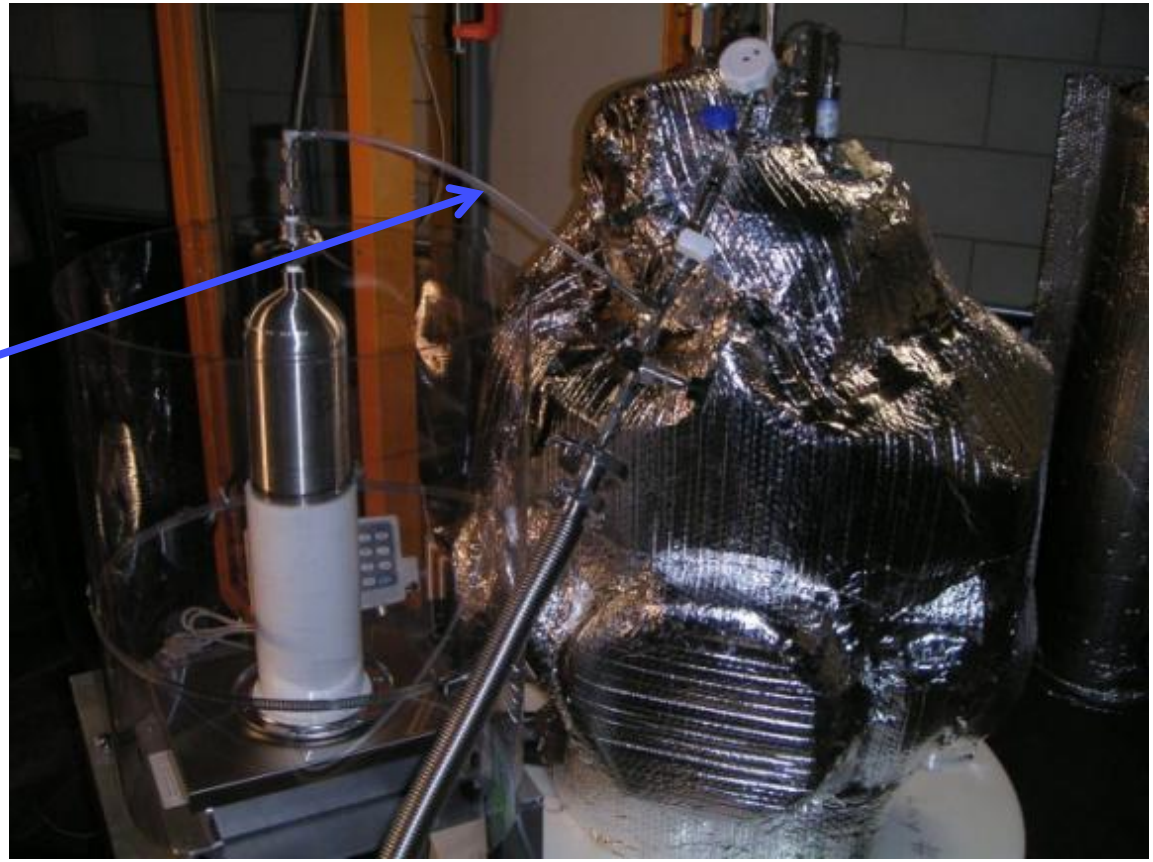

Link to Operations Procedures:
http://coupp-docdb.fnal.gov:8080/cgi-bin/ShowDocument?docid=167

Muon veto

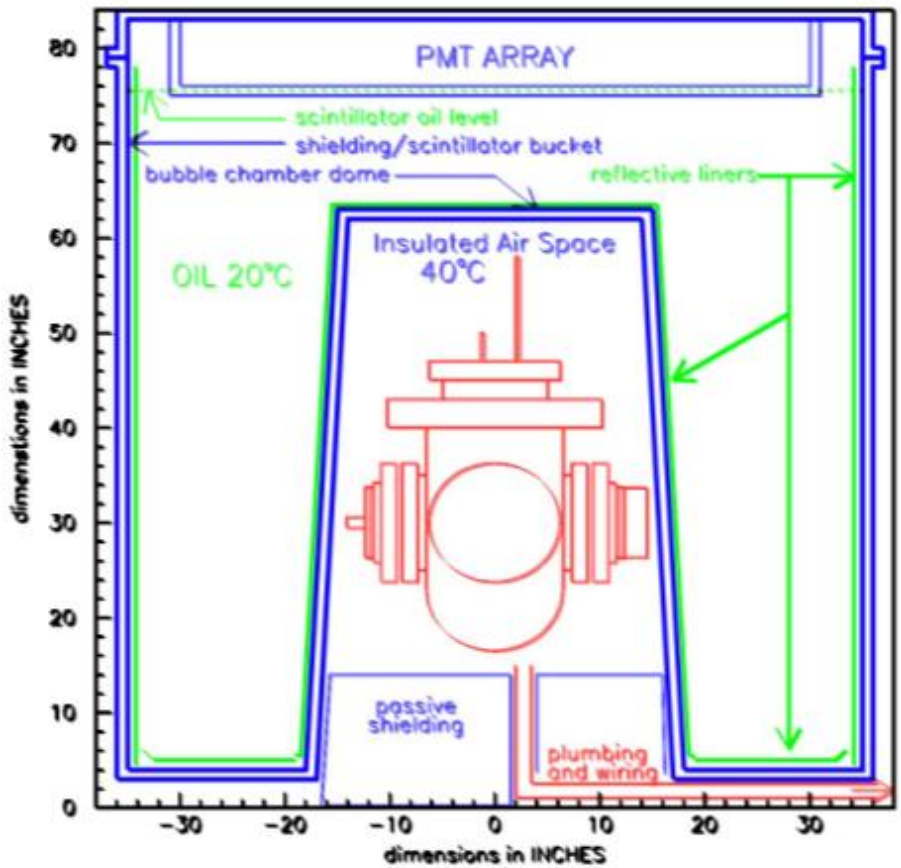

Liquid Scintillator "Bundt Cake"

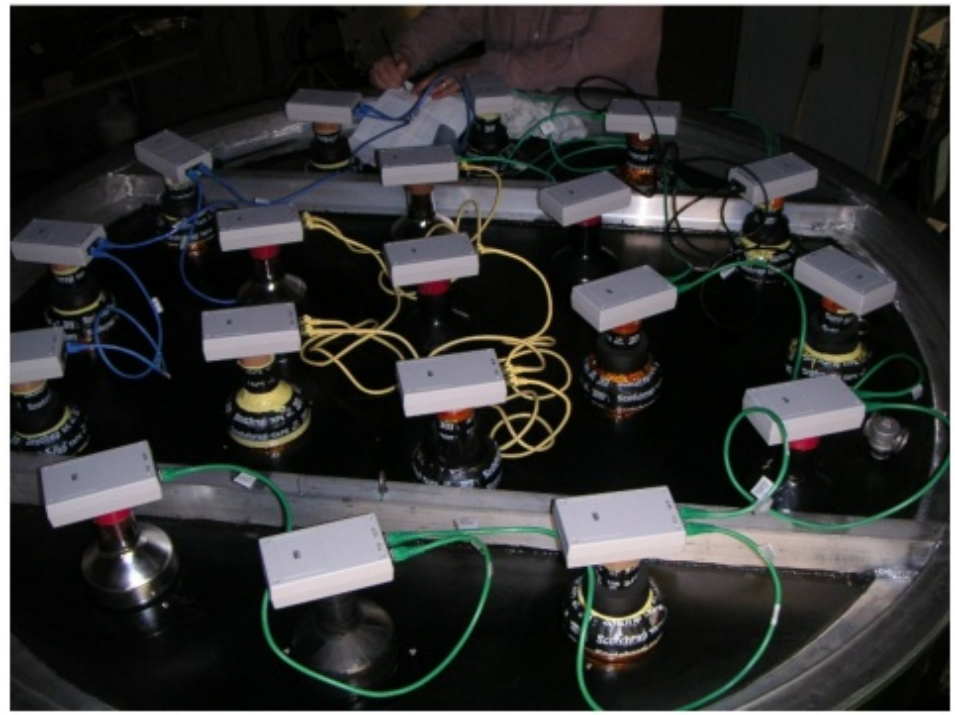

PMT Bases feature:

- On board digitizers
- Cockcroft-Walton HV
- Power and data over ethernet

Process Flow Diagram

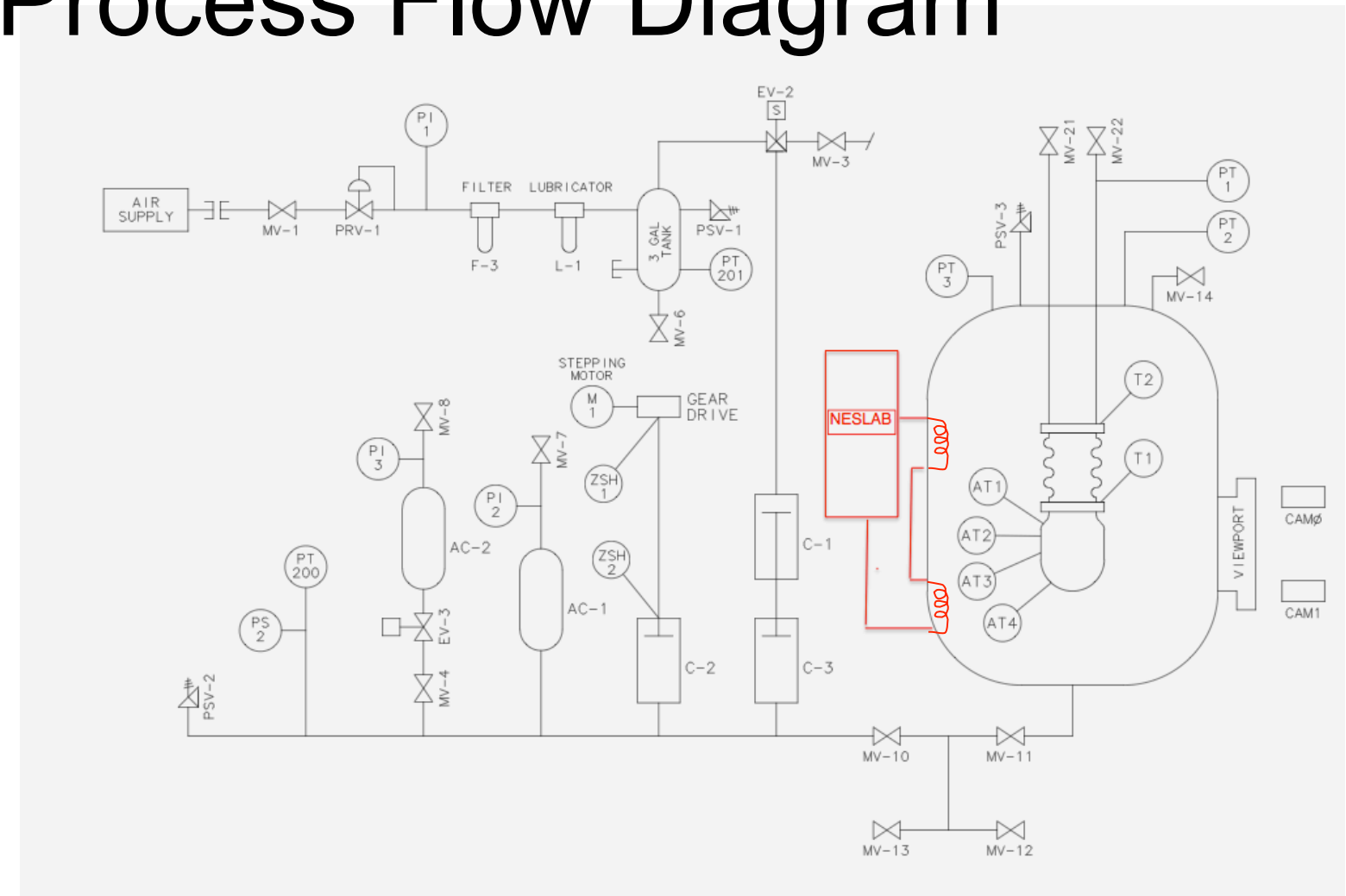

Instrumentation Wiring Diagram

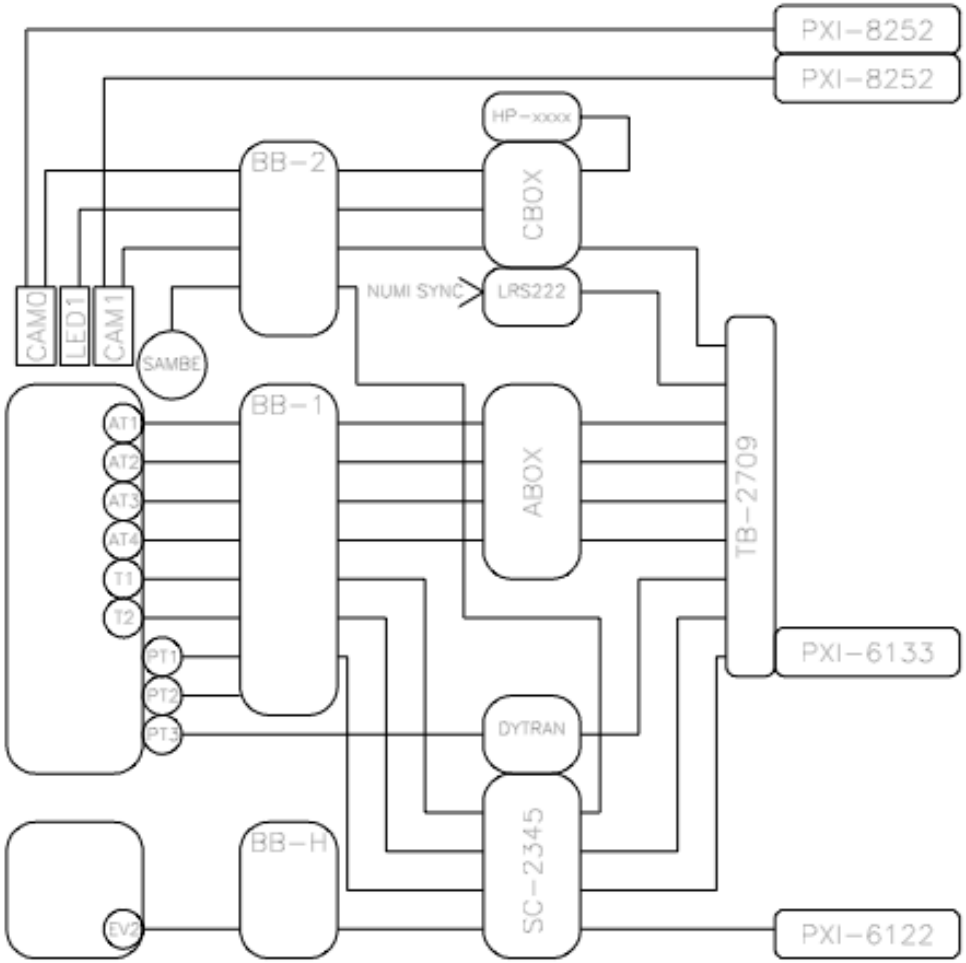

Instrumentation Wiring Diagram

bubble chamber

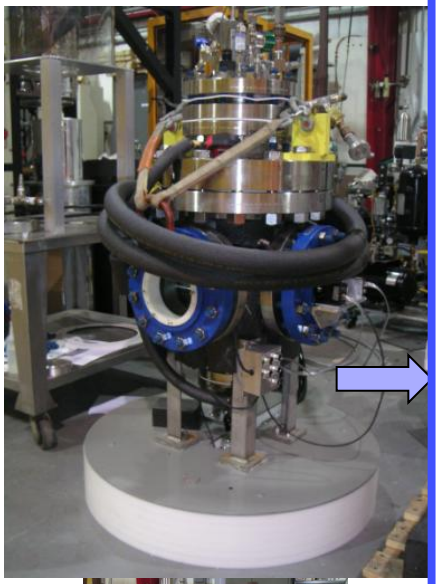

hydraulic cart

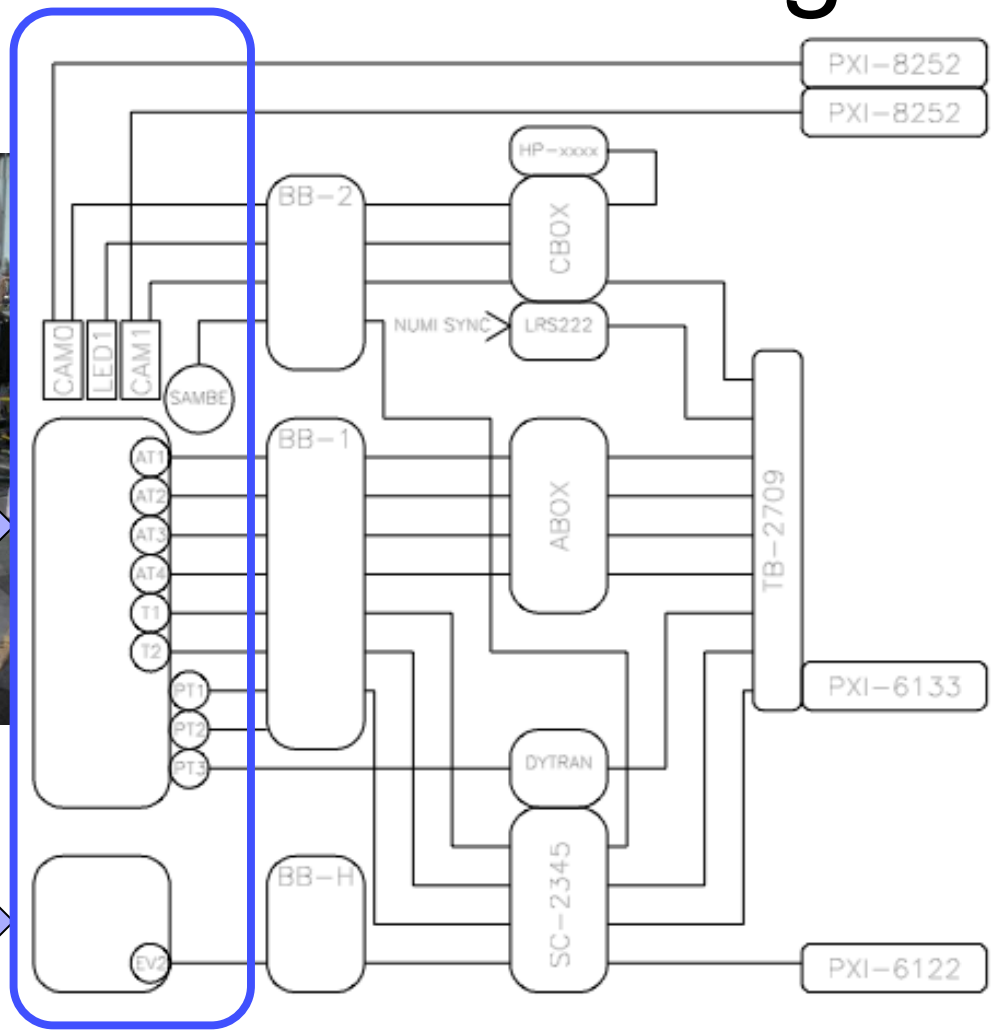

Instrumentation Wiring Diagram

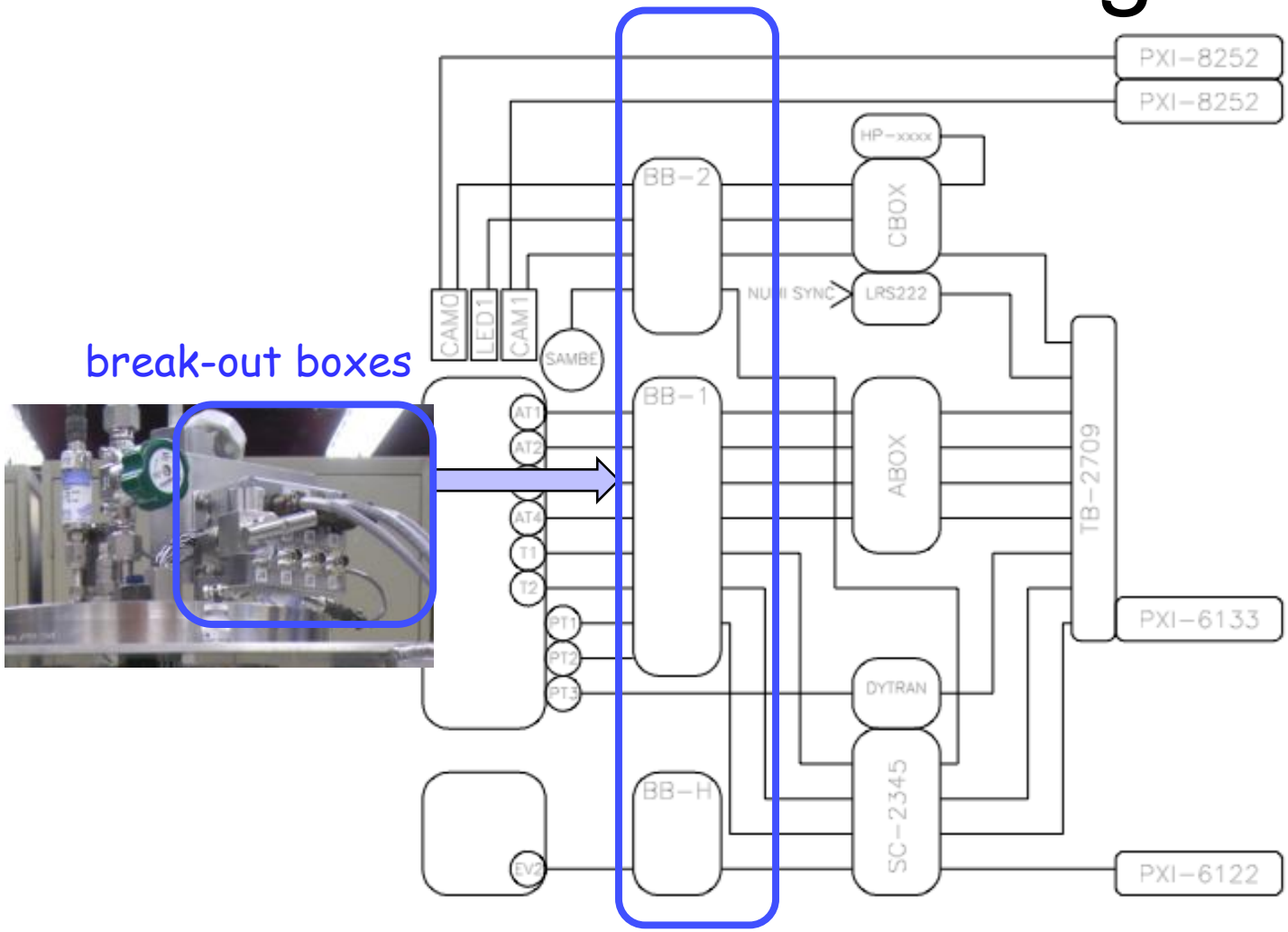

Instrumentation Wiring Diagram

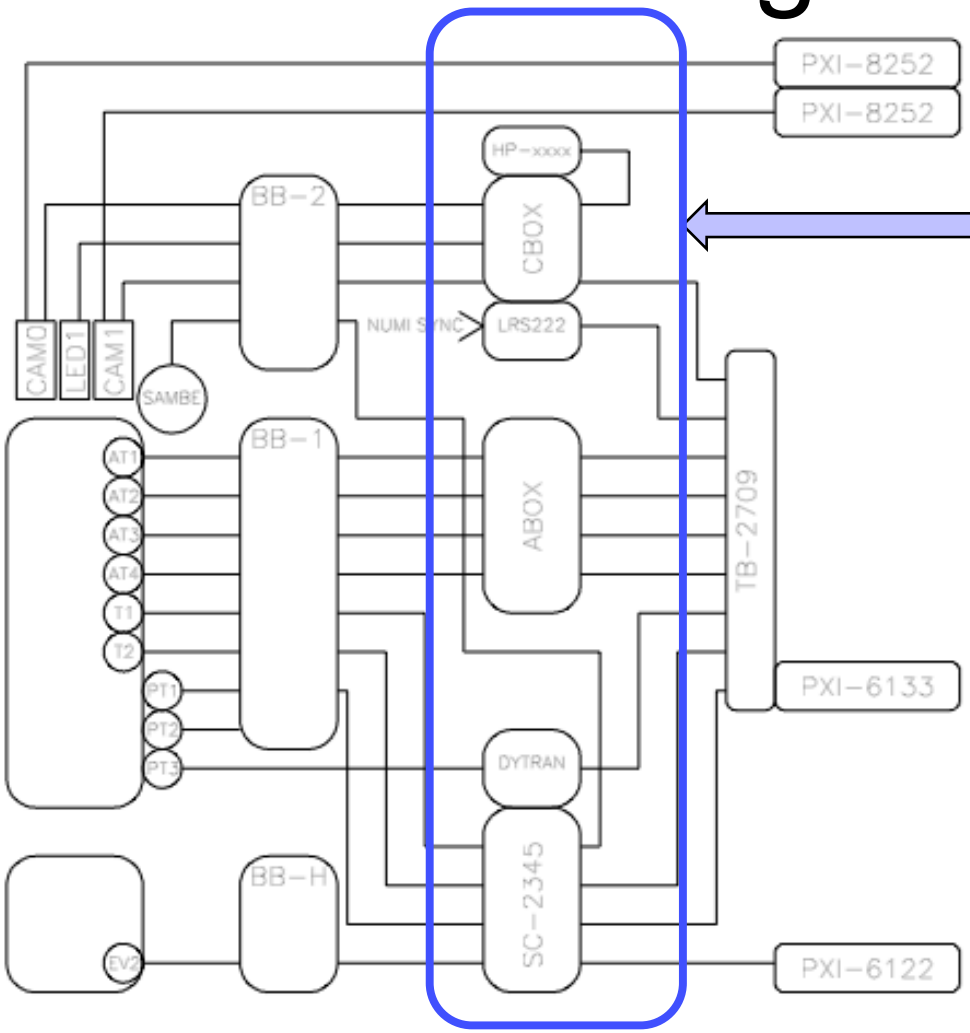

signal conditioning elements

Instrumentation Wiring Diagram

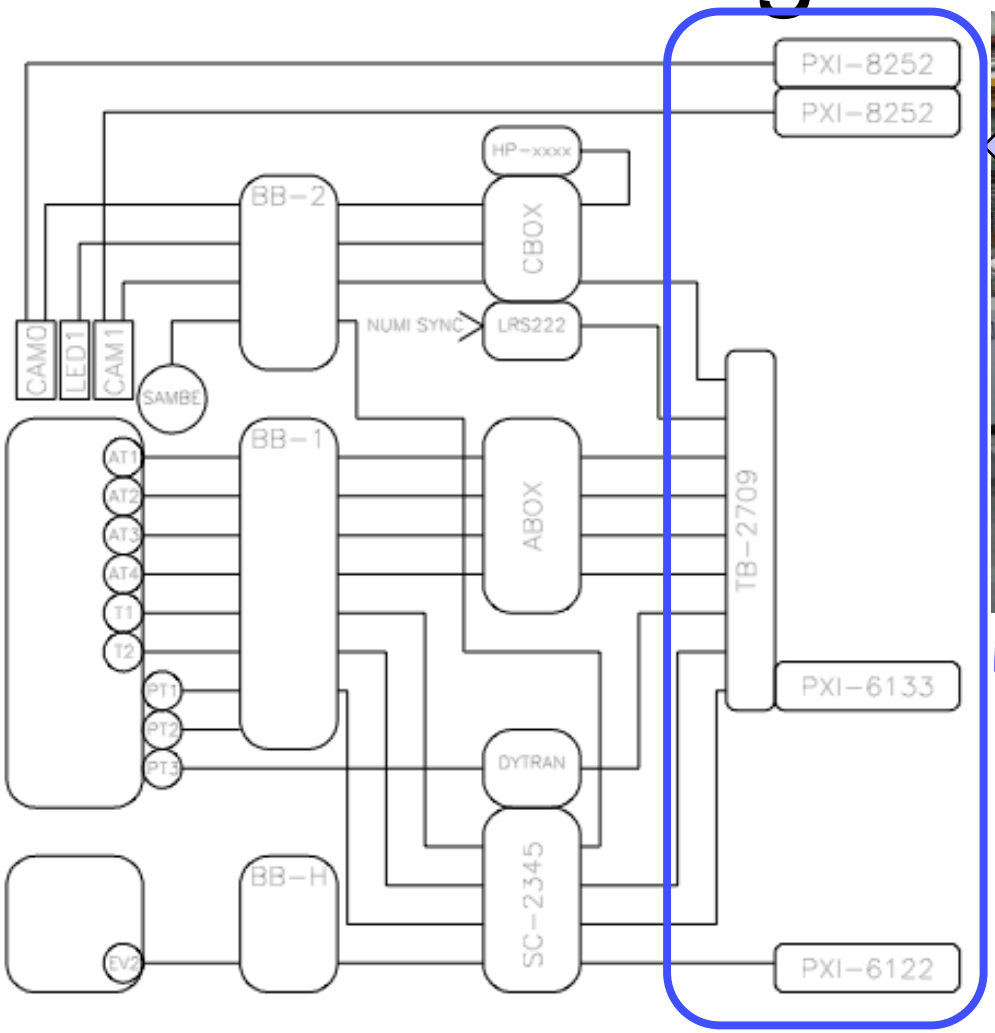

PXI-DAQ elements

Information Flow Documentation

- Instrument List
- Wiring Map
- Data Format Specification
- DAQ code (LabVIEW)
- Offline Reconstruction Code

BUBBLE Chamber expansion Cycle

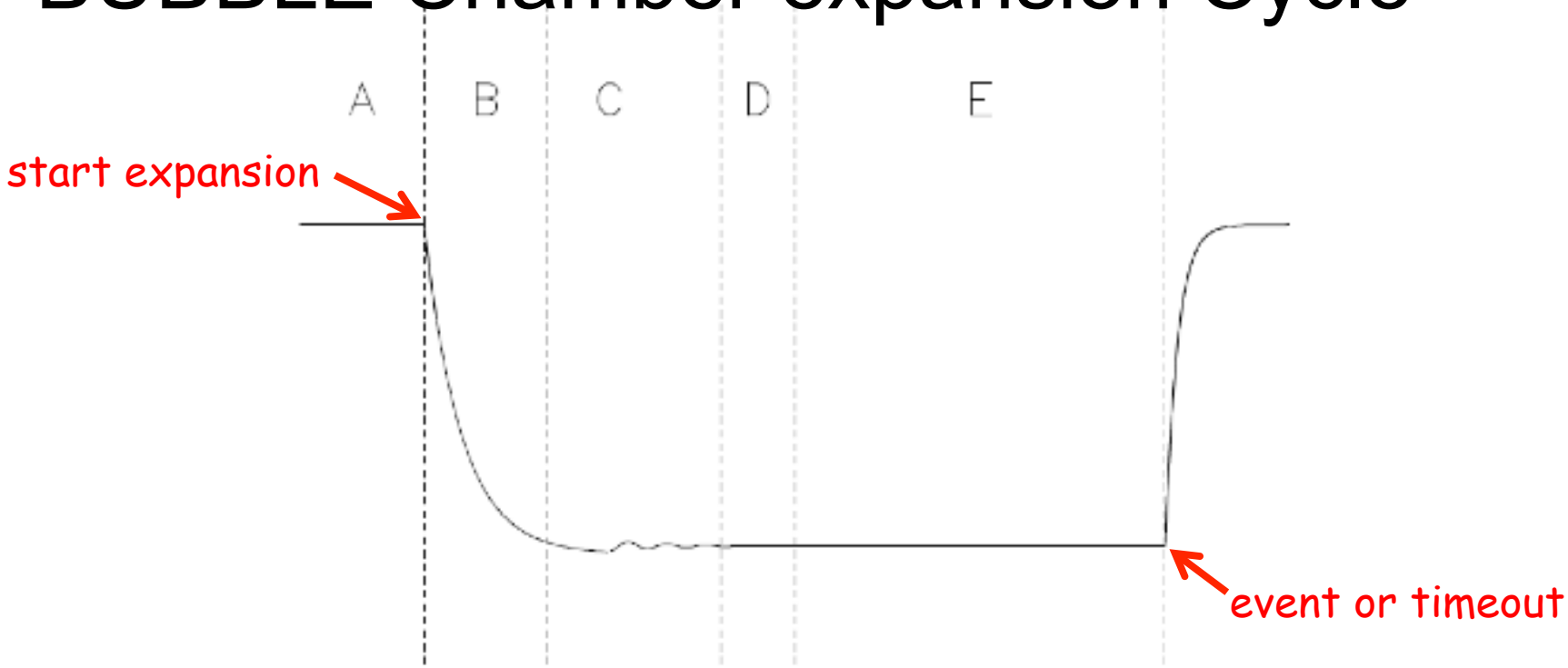

Figure 1: The epochs of a COUPP bubble chamber expansion cycle comprise (A) the compression period, (B) the expansion ramp, (C) the gross expansion settling time, (D) the fine expansion settling time, and (E) the period of stable superheated operations.

BUBBLE Chamber expansion Cycle

DAQ Acquires:

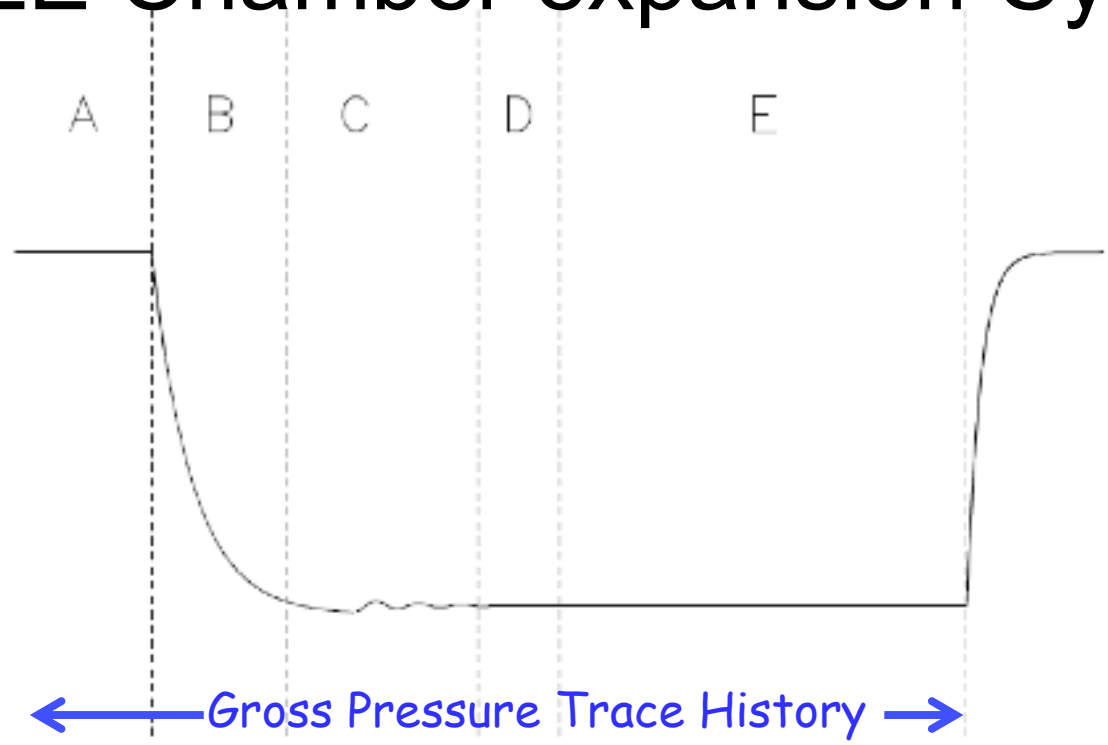

Figure 1: The epochs of a COUPP bubble chamber expansion cycle comprise (A) the compression period, (B) the expansion ramp, (C) the gross expansion settling time, (D) the fine expansion settling time, and (E) the period of stable superheated operations.

BUBBLE Chamber expansion Cycle

DAQ Acquires:

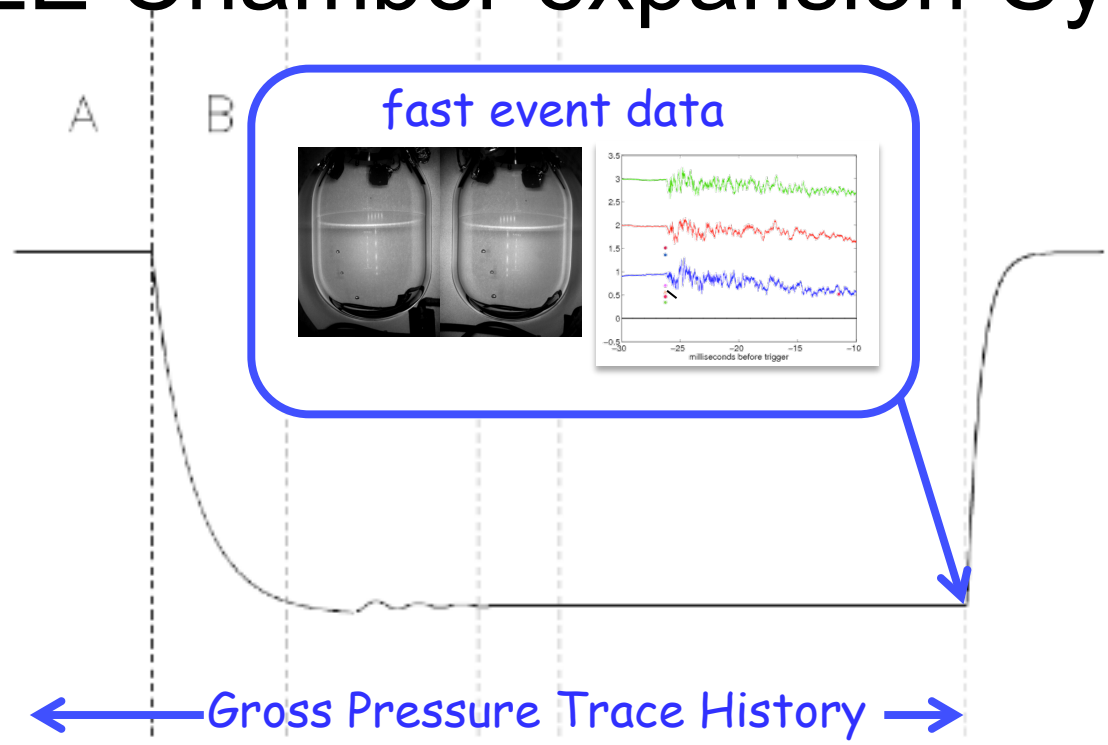

Figure 1: The epochs of a COUPP bubble chamber expansion cycle comprise (A) the compression period, (B) the expansion ramp, (C) the gross expansion settling time, (D) the fine expansion settling time, and (E) the period of stable superheated operations.

Data Acquisition and Controls

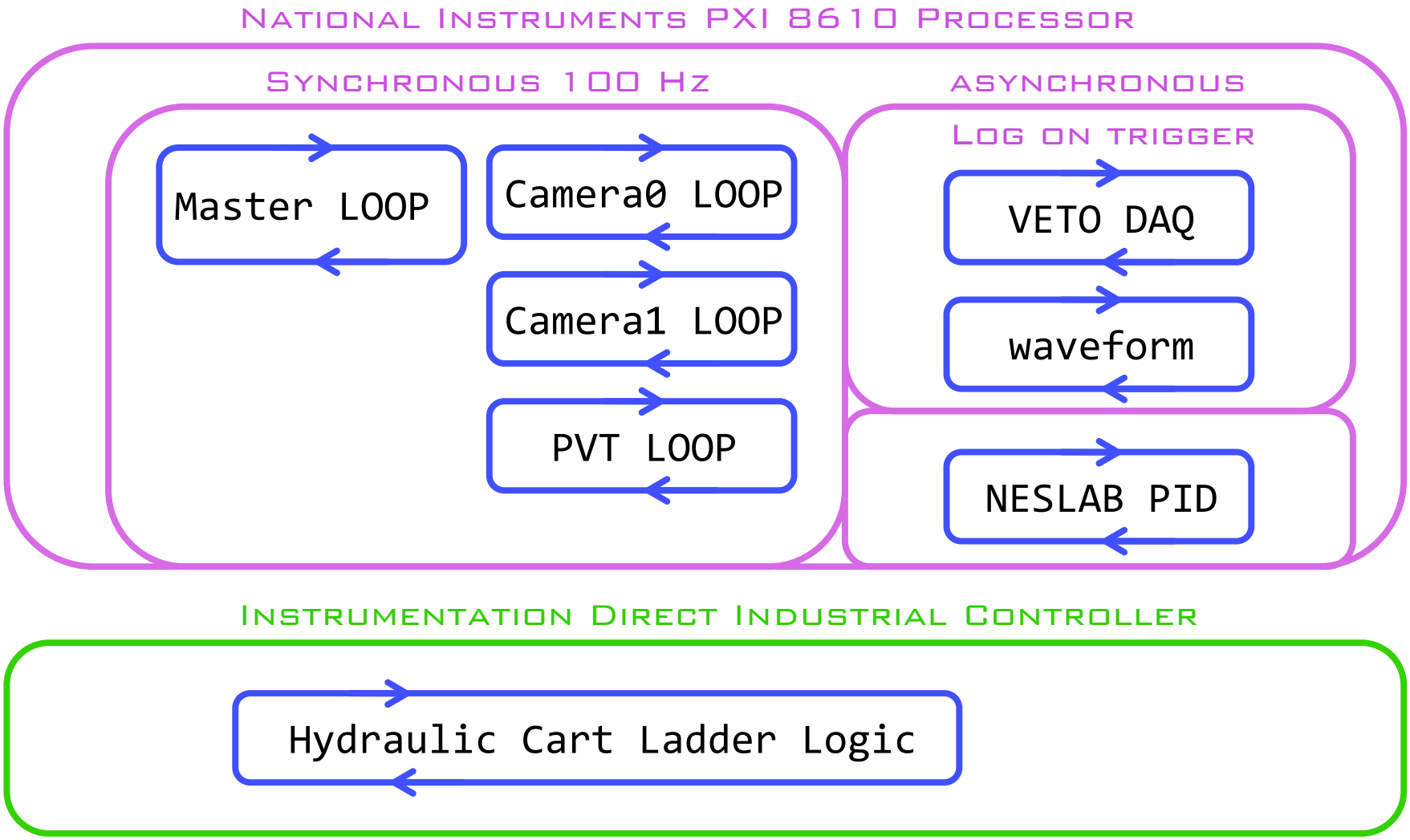

State = Expanded

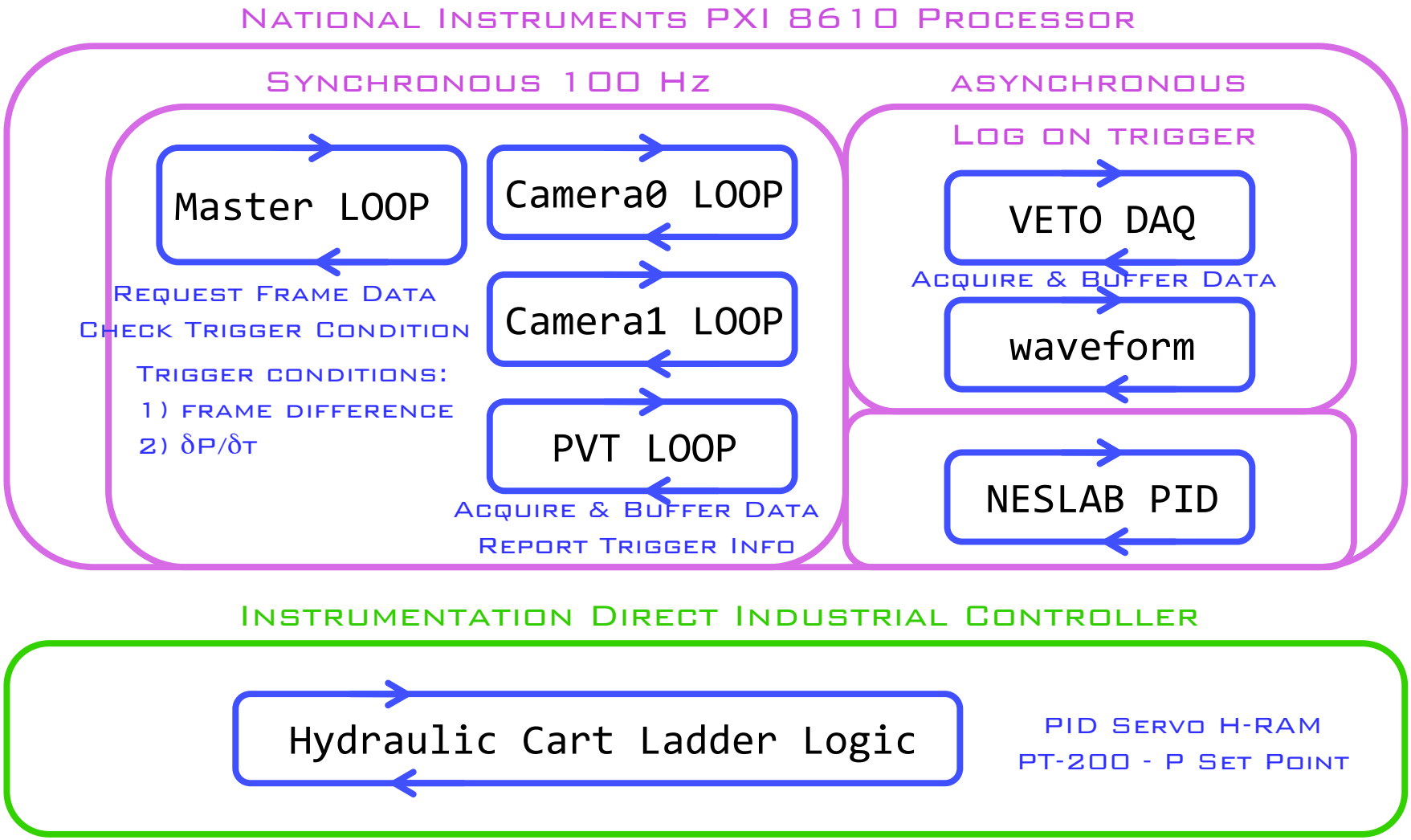

State = Triggered

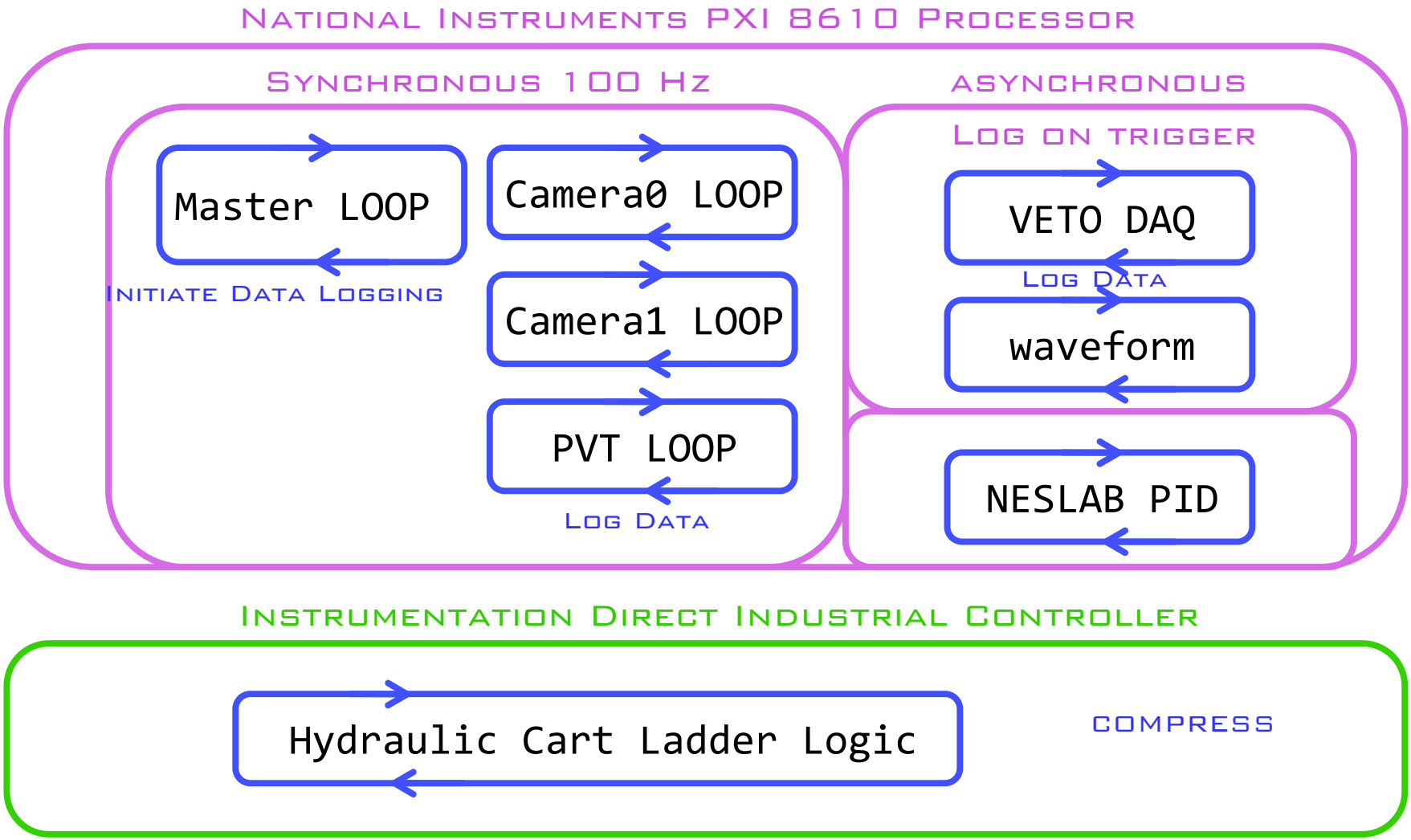

State = Compressed

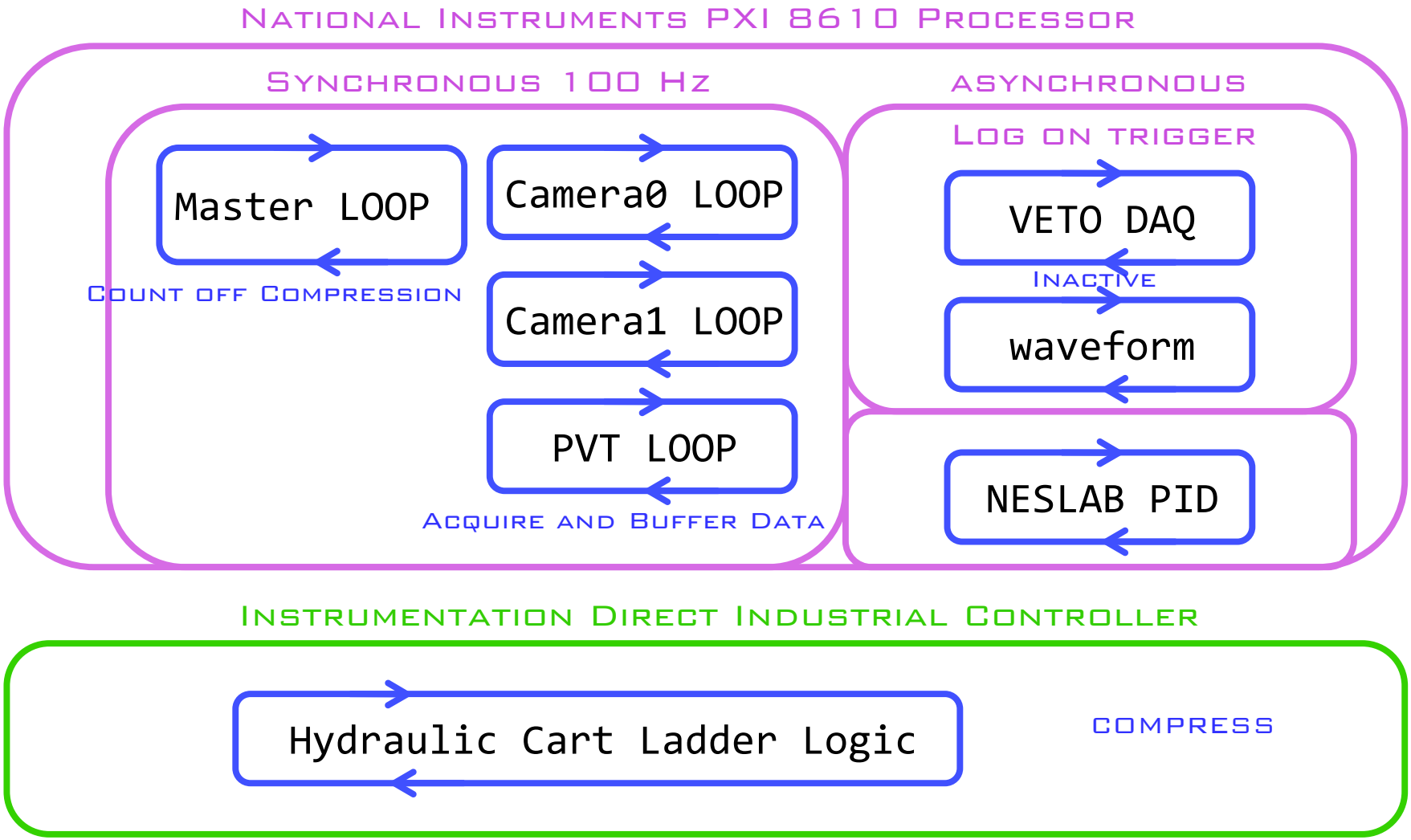

The Data Structure

- A Run is a folder (Directory)
  - "AutoRun" feature: automatically starts and stops runs
  - Run number is generated from the Date e.g. 20090918_0
- Within a Run Folder:
  - Run.txt 1 line per event summary file for this run
  - RunParameters.txt constants for this run
  - event folders (Directory Names are 0, 1, 2, 3...)
- Contents of an Event Folder
  - 10 cam0 sequential images .bmp (
  - 10 cam1 sequential images .bmp
  - event.txt summary line for this event (one line for Run.txt)
  - history.txt (t, v, p... history)
  - cam0.txt (camera0 history files indexed to image buffer)
  - cam1.txt (camera1 history files indexed to image buffer)
  - p100.txt (pressure data indexed to image buffer)
  - traces.txt (2.5 MHz waveform data)

Offline Analysis

1) Image Data
   a) Find bubbles (in pixel coordinates)
   b) Reconstruct (x,y,z)
   c) Use in fiducial volume analysis

2) Fast Trace Data
   a) Identify t_0 in acoustic traces
   b) Determine acoustic power in rough frequency bins
   c) Fast trace data also includes NUMI sync, veto
   d) Use to classify event types

3) Pressure History Data
   a) Tabulate time t(P) spent at each pressure.

4) The Answer Is:
   a) Rate(event type i, at pressure P) = $N_{events}(i,P) / t(P)$

Summary

1) COUPP 2L is a very simple experiment, based on a robust technology

2) The Analysis is straightforward and turnkey
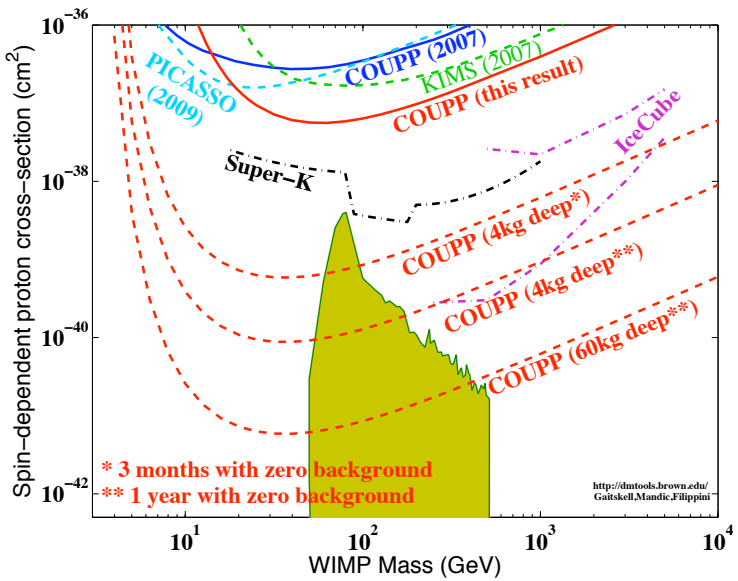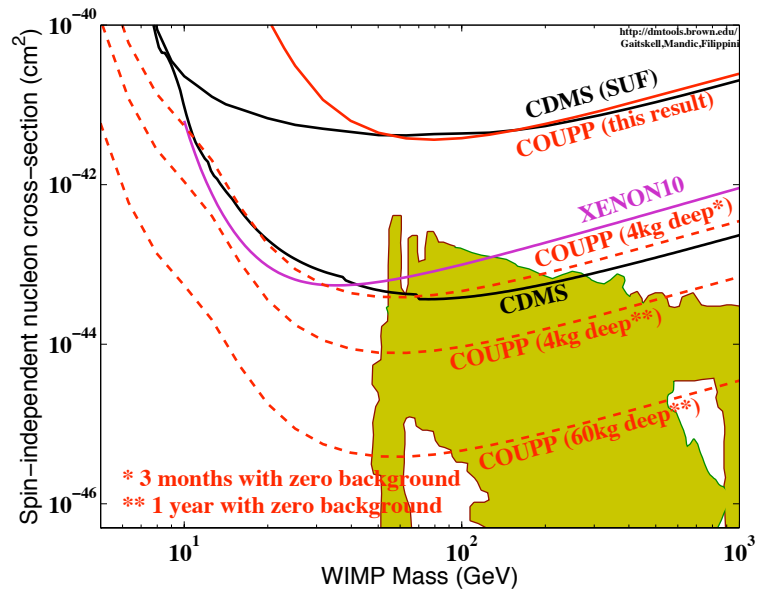
3) The Physics is fantastic