FERMI NATIONAL ACCELERATOR LABORATORY

Report on the December 18, 2009 COUPP-2L Controls Failure

Michael B. Crisler

1/15/2010

On 18 December 2009, the COUPP 2L bubble chamber experienced a failure in its data acquisition and controls system resulting in 7.8 hours of operation without a functioning trigger. The result was a hyper-extension of the internal pressure balancing bellows, followed by a period of expansions which occurred with the bellows in the already hyper-extended state. Upon discovery, the run was terminated by hand, the normal hydraulic configuration of the chamber was restored, and the chamber was idled in a safe state pending an assessment of the causes of the failure and of the damage to the equipment. This report provides an analysis of the failure and its underlying causes and an assessment of the damage to the chamber.

Introduction

The COUPP 2-liter bubble chamber is an R&D device operated in the tunnel upstream from the MINOS near detector hall under T945-A2 "*Muon Veto and Shielding Upgrade For COUPP 2-liter chamber test In the MINOS Hall*" within the Fermilab Test Beam Program. T945-A2 was submitted in the summer of 2007 and signed in the summer of 2008 with the expectation of operations in the late summer of 2008. The work was completed in the summer of 2009, and the equipment was installed in the MINOS near detector hall starting in August of 2009.

The COUPP 2-liter chamber is an upgrade to the COUPP 1-liter chamber which operated as T945 in the MINOS near hall from 2005 through 2008. The COUPP 1-liter chamber effort has been successful in that it provided:

1) A demonstration of the stable operation of a 2-kg continuously sensitive bubble chamber.
2) A demonstration of powerful suppression of γ-recoil induced events.
3) New limits on spin-dependent WIMP interactions [Spin Dependent WIMP Limits from A Bubble Chamber, Science 319:933-936, 2008]

But the original COUPP-1L chamber suffered from significant technical problems including:

1) Radon emanation from inner detector and plumbing components,
2) alpha particle emissions from the walls of the quartz bubble chamber vessel leading to bubble events on the vessel walls,
3) cosmic ray induced neutron backgrounds due to insufficient veto performance, and
4) data acquisition and controls shortcomings.

The COUPP 2-liter device was developed as a follow-on effort to address these issues. It is equipped with a second generation hydraulic controls cart, a second generation data acquisition system, and a second generation muon veto and shielding system. Improved fluid handling procedures were used as well as improved choices of fluid handling and sealing materials. The COUPP-2L inner vessel was fabricated from synthetic silica to address the alpha emission problem. In addition to the improvements outlined in the T945-A2 MOU, the chamber was also equipped with prototype acoustic transducers to investigate the possibility of α-recoil discrimination via the acoustic signature. An elevation view of the setup is shown in figure 1. Photographs of the elements of the experiment and the final installation are provided in figures 2 and 3.

Normal data taking operations began on August 19, 2009 and continued without incident through December 18, 2009 when a data acquisition failure caused the experiment to operate without a functioning trigger. This resulted in a hyper-extension of the chamber's pressure balancing bellows which left the bellows distorted. No other damage occurred. This report provides an analysis of what happened, an assessment of the damage, and an assessment of the prospects for continued running.

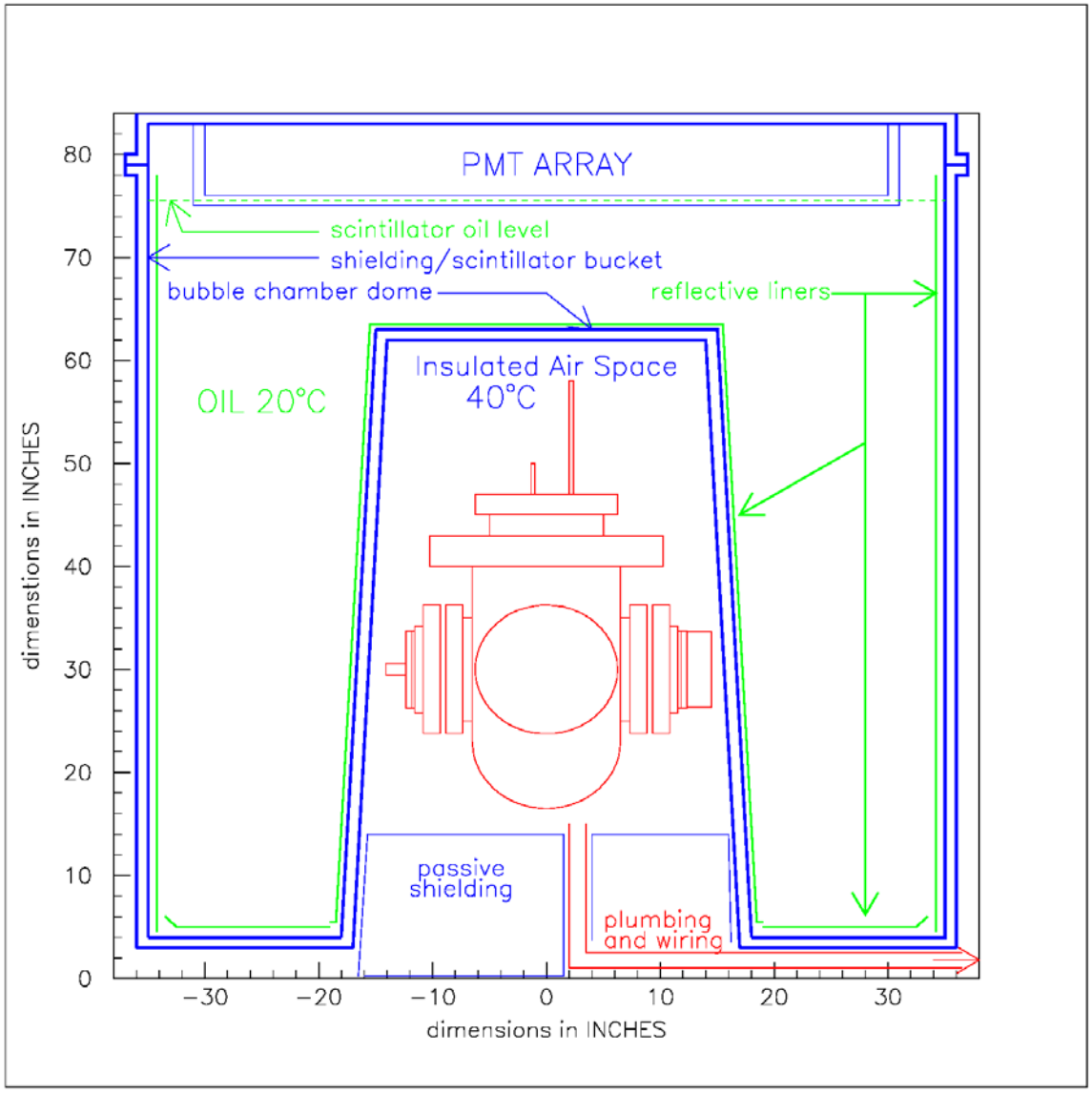

Figure 1: An elevation view of the COUPP 2L bubble chamber shown in a cross-section of its veto/shielding tank. The tank is azimuthally symmetric (round) with a domed bottom which provides the shielded, insulated space for the bubble chamber.

Figure 2: The assembled COUPP-2L bubble chamber (top left,) the 2nd generation hydraulic controls cart (top right,) the NESLAB heater/chiller cart (bottom left,) the data acquisition rack (bottom center) and the fluid handling cart (bottom right.)

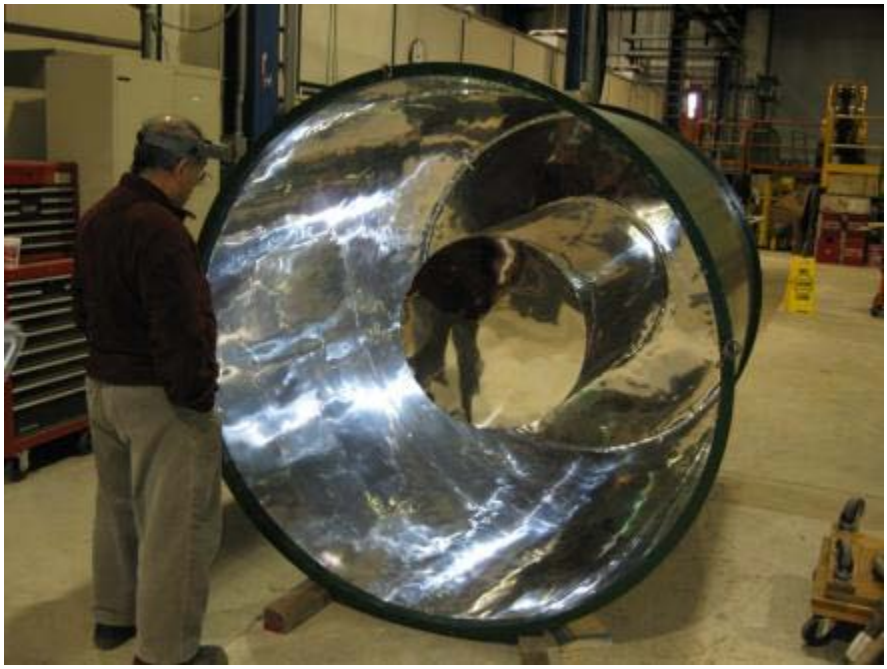

Figure 3: (top) the installed experiment. The hydraulic controls cart and the heater chiller cart are near the center of the frame. A live view of the bubble chamber inner vessel is visible on the display on the data acquisition rack. The veto/shielding tank is in place over the bubble chamber. (Below) A view of the reflective coated inside surfaces of the veto tank. A standard PPD/MD staffer is supplied for scale.

The Basic Function of the Hydraulic controls

The basic operating principles of the generation 2 hydraulic cart are illustrated in figure 4. A large, stepping motor controlled hydraulic cylinder is used to control the overall fluid volume in the bubble chamber hydraulic system. A small, compressed air actuated cylinder is used to initiate expansion and fast compression. The control system in the cart is governed by a single "expand/compress" logic signal which is provided by the Data Acquisition System. In the compressed state, compressed air has been applied to the small cylinder and the entire hydraulic system is pressurized to roughly 200 psi. To expand the system into its superheated state, the compressed air is vented to atmosphere allowing the small piston to be driven to its upper stop by the expansion of the fluids in the chamber. After a preset time delay, the stepping motor control on the cart is activated, operating the large cylinder in a feedback loop to regulate the measured hydraulic pressure to the set value. When an event is detected by the video trigger from the data acquisition system, the compress signal is issued which de-activates the stepping motor and actuates the compressed air solenoid to compress the chamber.

The basic function of the DAQ and triggering system

The bubble chamber inner vessel is illuminated with light from red LEDs and is viewed by two BASLER A-602f fire-wire cameras operated at 100 frames per second. The primary trigger for the experiment is derived from the camera data. The ADC values from each frame are subtracted pixel-by-pixel from the previous frame. A threshold is applied to these ADC differences and second threshold is applied to the count of pixels exceeding the ADC difference threshold. This two parameter characterization of image differences has been found to provide an entirely satisfactory trigger for the experiment for all choices of operating temperature and pressure. Secondary triggers for the experiment are based on the change in pressure (P_{CF3I} or P_{glycol}) or in differential pressure (P_{CF3I}-P_{glycol}) between two 10-msec samples.

The video triggering loops form the core of the data acquisition system. To ensure that all camera frames and pressure measurements are properly synchronized, all data acquisition loops are indexed to the camera driver at 100 Hz. In one data acquisition cycle the system accumulates a new sample (two camera images plus temperature and pressure data,) stores the data sample in history buffers, computes trigger quantities (frame differences, pressure differences,) and forms trigger decisions. If a trigger condition arises, the system initiates recompression and continues to accumulate post-trigger image and pressure data.

The data acquisition program also provides overall run management including the creation of run and event directories and the logging of temperature and pressure histories, diagnostic information, and image data. The experiment is designed to run without operator intervention, starting and stopping data runs according to a predetermined schedule.

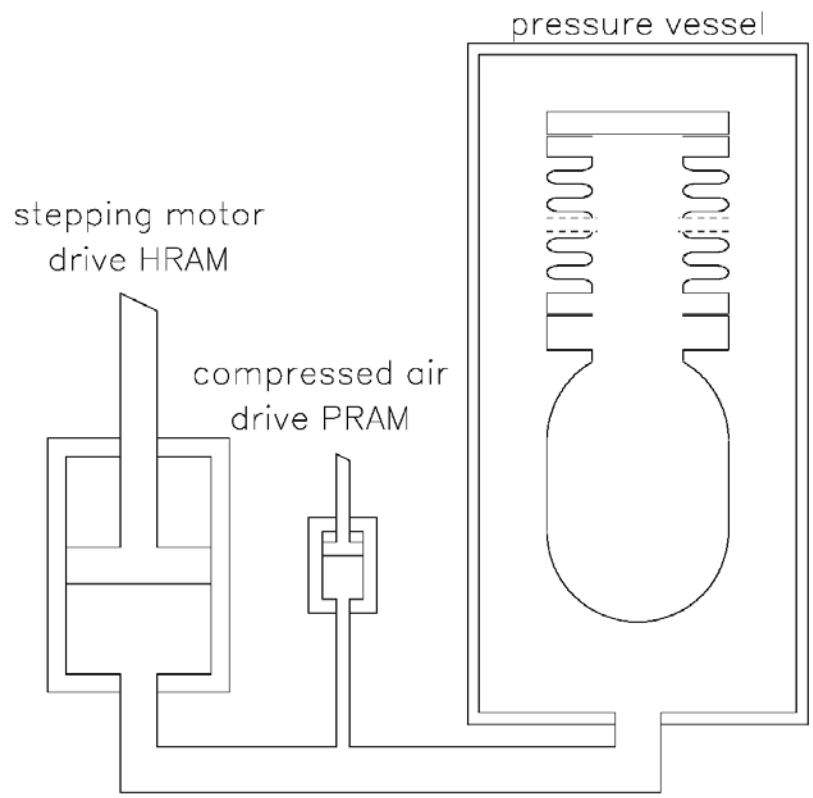

Figure 4: A schematic representation of the hydraulic controls system. The bubble chamber inner vessel is closed by a pressure balancing bellows which is suspended from the top flange of the pressure vessel. A large volume, stepping motor driven hydraulic cylinder is provided to adjust the net liquid volume and control the pressure. A smaller, compressed-air driven cylinder is provided to accomplish fast compression. The entire volume of the pressure vessel, cylinders, and plumbing is filled with de-gassed propylene glycol which serves as a hydraulic fluid. To expand (superheat) the chamber, the compressed air to the small cylinder is vented to atmosphere allowing the small cylinder to be driven to its upper limit by the expansion of the compressed fluids. After a specified time delay, control of the large cylinder in initiated in a PID loop to control the expanded state pressure. When an event occurs, a trigger signal to the cart initiates activation of the compressed air and de-activation of the PID loop on the large cylinder.

So What Went Wrong?

On Saturday, December 18 2009, 57 minutes after midnight, run 20091216_0 was terminated normally by the "auto-run" function of the data acquisition system. A new run 20091218_0 was initiated. In the initiation of 20091218_0, an unknown error occurred in the camera software causing the camera loops to freeze in an unusual way. The video acquisition loops continued to operate without generating errors, but without capturing new images. Each loop continued to return copies of a single stale image. With no frame-to-frame image changes, the video trigger was obviously disabled. In addition, since the video loops were no longer transferring images, they were no longer constrained to operate at 100 Hz. This had the secondary effect of de-sensitizing the pressure trigger as well. The pressure trigger threshold is applied to a pressure difference between samples. Increasing the frame rate decreases the δP per sample and effectively raises the pressure trigger threshold. The increased sampling rate apparently raised the pressure trigger threshold by a factor of order 2. Since nothing in the system recognized an error, the all of the data acquisition loops continued normally, only at an accelerated sampling rate and without a properly functioning trigger.

Figure 5 shows the histories of the 43 events in this run. The top plot shows the positions of the large hydraulic ram in black and of the fast pneumatic ram in green. The lower plot shows the hydraulic pressure is blue and the CF_3I pressure in red. Figures 6-8 show the pressure histories of selected relevant events. The trace history plots show the expansion in seconds and indicate the hydraulic pressure in blue and the CF3I pressure in red. Since the bubble rate in this experiment is quite low, the first nine expansions were uneventful. In each case the chamber expanded to the set pressure of about 28 psi[1]. The large hydraulic ram remained steady at its nominal value of about 56%. The fast piston (the plot indicates the fast piston position after compression) held steady at 80%. Each of these expansions terminated normally on a 1000 second expansion timeout trigger. Interestingly, 9000 seconds without a bubble corresponds to a physics limit comparable to our 2006 Science paper.

On event 9, a bubble occurred. With no trigger, the bubble grew until the overall hydraulic pressure (and more importantly the CF_3I) was raised to the CF_3I vapor pressure. At this point, the pressure regulation responded by raising the hydraulic ram to draw fluid out of the chamber until it reestablished the hydraulic pressure at the regulation set point at around 27 psi on the figure. At this point the CF_3I pressure was considerably higher than the hydraulic pressure, with the pressure differential being made up by the extension of the bellows. The degree of extension required was determined by the volume of evaporated CF_3I. In this event, the process was terminated by the 1000 second timeout before the pressure regulation fully stabilized. The pressure history of this event is shown in Figure 6 (middle.) The next several events were short, unstable expansions triggered by the dP/dT trigger. A representative event is shown at the bottom of Figure 6.

[1] This is an un-calibrated pressure readback value. The actual pressure is 25 psia or 10 psig.

Figure 7 shows the pressure histories for events 19, 25, and 27. On events 19 through 26 there were some successful expansions which included some small amount of bubbling. The pressure control moved in the direction of restoring the normal operating positions of the pneumatic and hydraulic rams. Event 27 was the straw that broke the camel's back. Another large bubble occurred. The pressure regulation again pulled up on the large hydraulic ram pulling fluid out of the chamber to try and re-establish 27 psi. The excursion this time was sufficiently large that upon compression the fast piston bottomed out and was no longer able to compress the chamber.

Figure 8 shows the pressure histories of the following three events 28, 29, and 30. In these events, the expansion history begins in the compressed state (or "failed-to-be-compressed" state) at about 100 psi. Each of these events represents inevitable progress toward a final equilibrium in which, upon expansion, the inner vessel CF_3I pressure is at the CF_3I vapor pressure while the hydraulic fluid is at the regulation set point of 27 psi. The differential pressure in this case is balanced by the force required to stretch the bellows.

How Much Did We Stretch the Bellows?

Figure 9 shows both camera images of the vessel in this hyper-extended state, compared to the vessel in its normal position. To put these images in context, see Figure 10 which is a photograph of the entire inner vessel assembly before installation. Figure 11 is a segment of a drawing of the quartz vessel indicating the allowed region for the acoustic sensor installation, and Figure 12 is a segment of a drawing of the backing flange indicating the thickness of that flange to be 1.75 inches. By comparing the features of the vessel images to the drawings and photographs, one can estimate that the bellows was stretched by roughly 2 inches.

Near its neutral position, the bellows[2] has (or should I say *had*…) a spring constant of 70 lb per inch, and an effective diameter of 3.824 inches. At a cross-sectional area of 11.48 inches^2, the nominal bellows differential pressure near equilibrium would be 6.1 psi per inch. Here, we are dealing with a differential pressure of order 60 psi which would necessarily correspond to a linear force of about 700 lb. That would suggest that the bellows was stretched well beyond its elastic region and likely yielded mechanically. I would likely also have been work hardened. For the several events that followed, the chamber was cycled between the maximally stretched position with a 700 lb force for the 1000 second expansion and a somewhat less extended position with perhaps a 300 lb force for each 30 second compression period.

Figure 13 shows images of the vessel shortly after restoration of the normal ram positions compared to three weeks later on January 7, 2010. Immediately after recovery the vessel shows a significant tilt. Clearly the bellows yeilded asymmetrically to stresses well beyond the elastic limit. Since the bellows was likely permanently stretched by the hyper-extension, the new equilibrium position was likely well below the position at which we would re-condense the CF_3I

[2] Rich Schmitt email communication: Mon, 6 Jun 2005 09:13:01 -0500; COUPP email archive

to liquid. Hence, the return to "normal" would require a second possibly inelastic compression distorting the bellows again.

Can We Continue to Operate the Chamber Without Fixing It?

It is possible that the distortions of the bellows occurred in a way such that the bellows retained sufficient springiness for continued operation. Or it is possible that the distortions were concentrated in locations like the inner and outer radii of the bellows convulutions such that continued operation could result in repeated flexing of already work-hardened material leading to cracking. We can't know the situation without looking inside.

The progress toward relaxation to its original tilt over three weeks might seem like a positive indication (like pounding the dent out of a damaged fender…), or it may indicate that the bellows is weakened and can't maintain its equilibrium shape against relatively small forces. Or it might mean that the distortions of the bellows just aren't mechanically stable and are relaxing naturally. Hard to say…

We have done some test expansions and it does seem possible to operate the chamber, although the quivering of the vessel on the bellows is a bit unnerving. I consulted Rich Schmitt who, as I recall said *"sounds pretty bad…stainless steel is pretty tough…but I dunno…"* which I guess sums up my view as well.

The cost of repairing the chamber will be a few thousand dollars for a new bellows and a new seal. The effort required will be small. The benefit of continued running will not be significant for a run of less than a few weeks plus additional calibration data, all of which would require several thousand expansions.

My final recommendation here is that we should declare victory on this run, decommission and remove the equipment to a staging area. Lab E/F comes to mind.

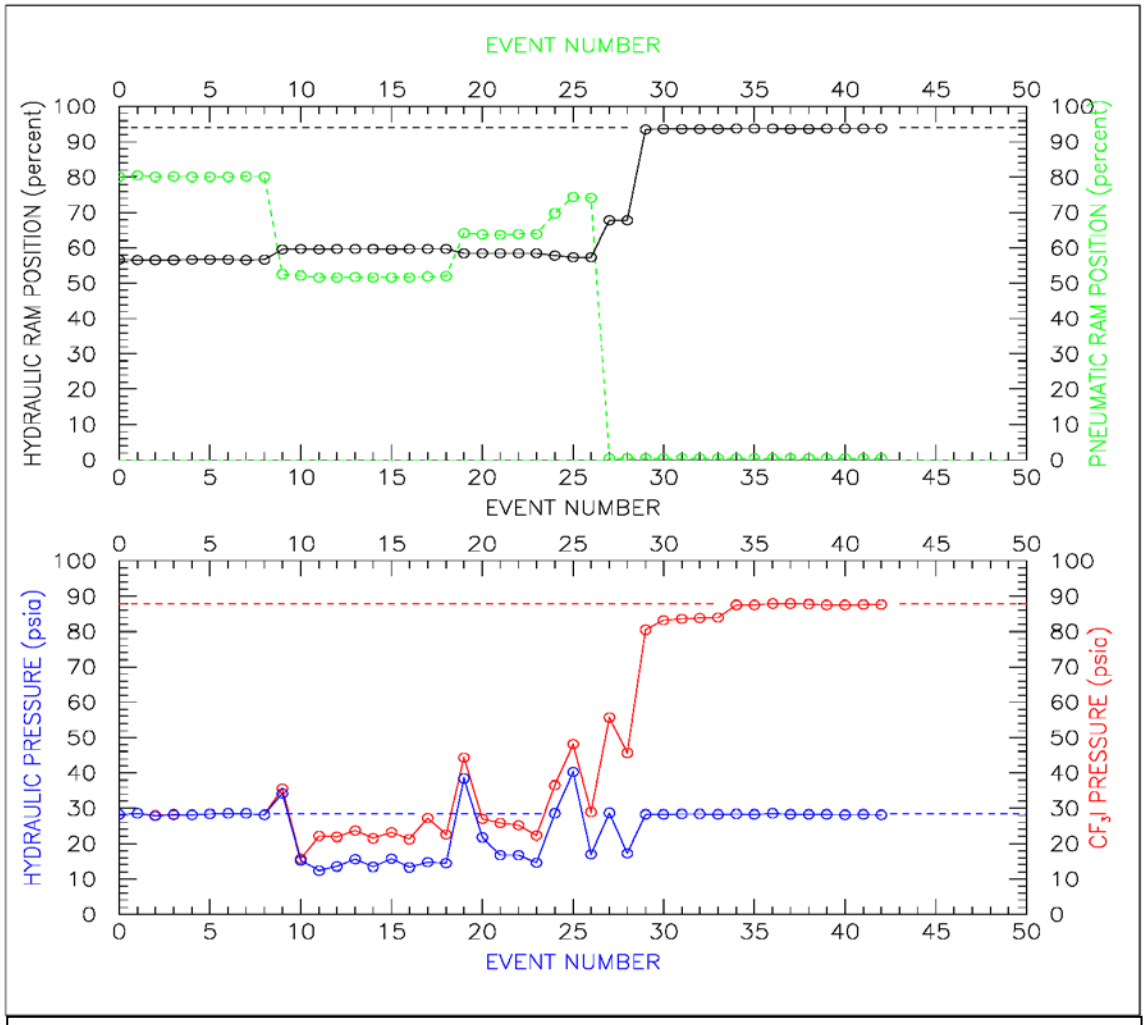

Figure 5: Event histories of the 43 events in run 20091218_0. The top plot shows the positions of the large hydraulic ram in black and the fast pneumatic ram in green. The lower plot shows the hydraulic pressure in blue and the CF_3I pressure in red. Events 0 through 8 show normal behavior with HRAM at 56%, PRAM at 80%, and the hydraulic and CF_3I pressures balanced at 28 psia. Event 9 shows the effect of a bubble with no trigger. HRAM withdraws to >60%, PRAM requires an excursion to 50% to compress the chamber, and a pressure differential begins to develop across the bellows. On subsequent expansions some CF_3I manages to re-condense, moving the system toward recovery. On Event 27, another significant bubble occurs causing a further excursion of HRAM and bottoming out PRAM. At this point the chamber could no longer compress so no further condensation was possible. Events 28-34 represent the transition to the final equilibrium in which the inner vessel pressure sits at the CF_3I vapor pressure, the hydraulic fluid at the regulation set point, and the difference appears as a differential pressure taken up by the bellows extension.

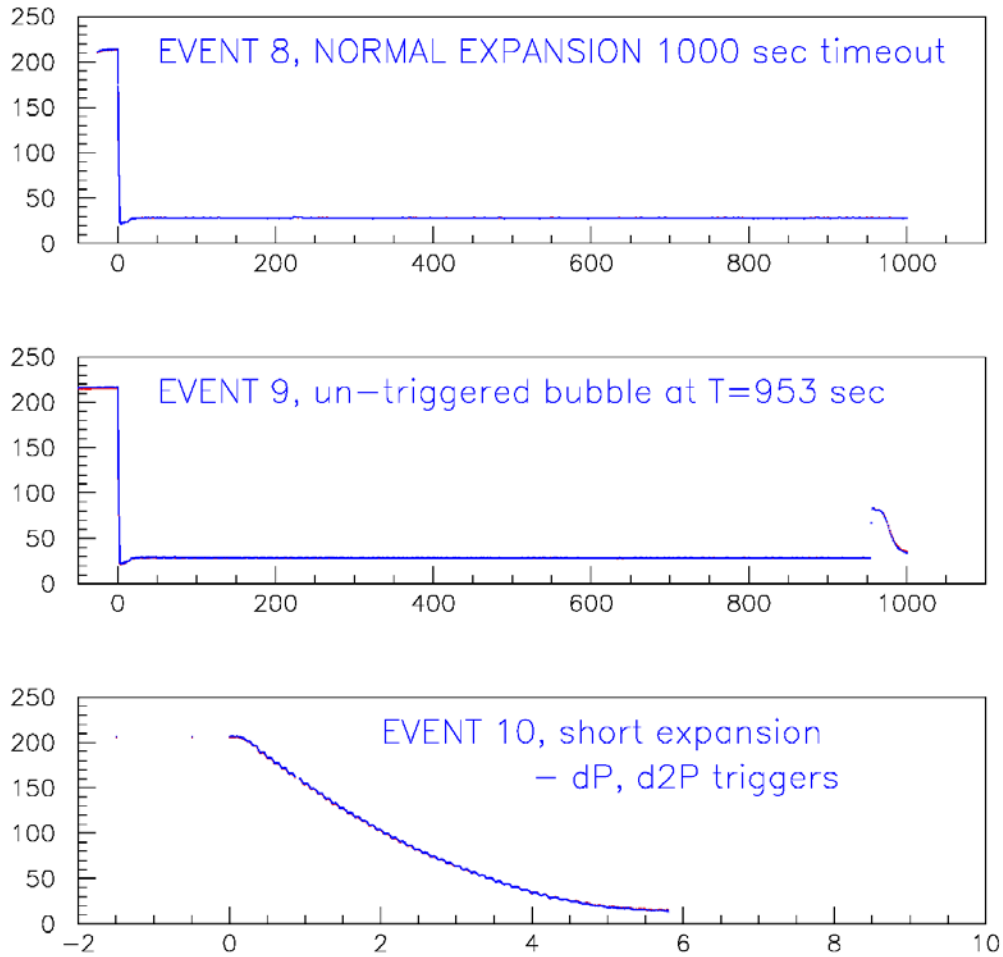

Figure 6: Expansion histories for events 8 through 10. Each plot shows the hydraulic pressure in blue and the CF_3I pressure in red. Event 8 was the last in a series of uneventful expansions ending in 1000 second expansion timeouts. Event 9 shows a significant bubble occurring at t=953 seconds followed by a period of 47 seconds in which the pressure regulation was attempting (successfully) to bring the pressure back to the regulation set point. There is no pressure differential at this point because the volume required to expand the original 80 psi bubble down to 28 psi was within the range of the hydraulic ram. Upon compression some of this gas likely condensed.

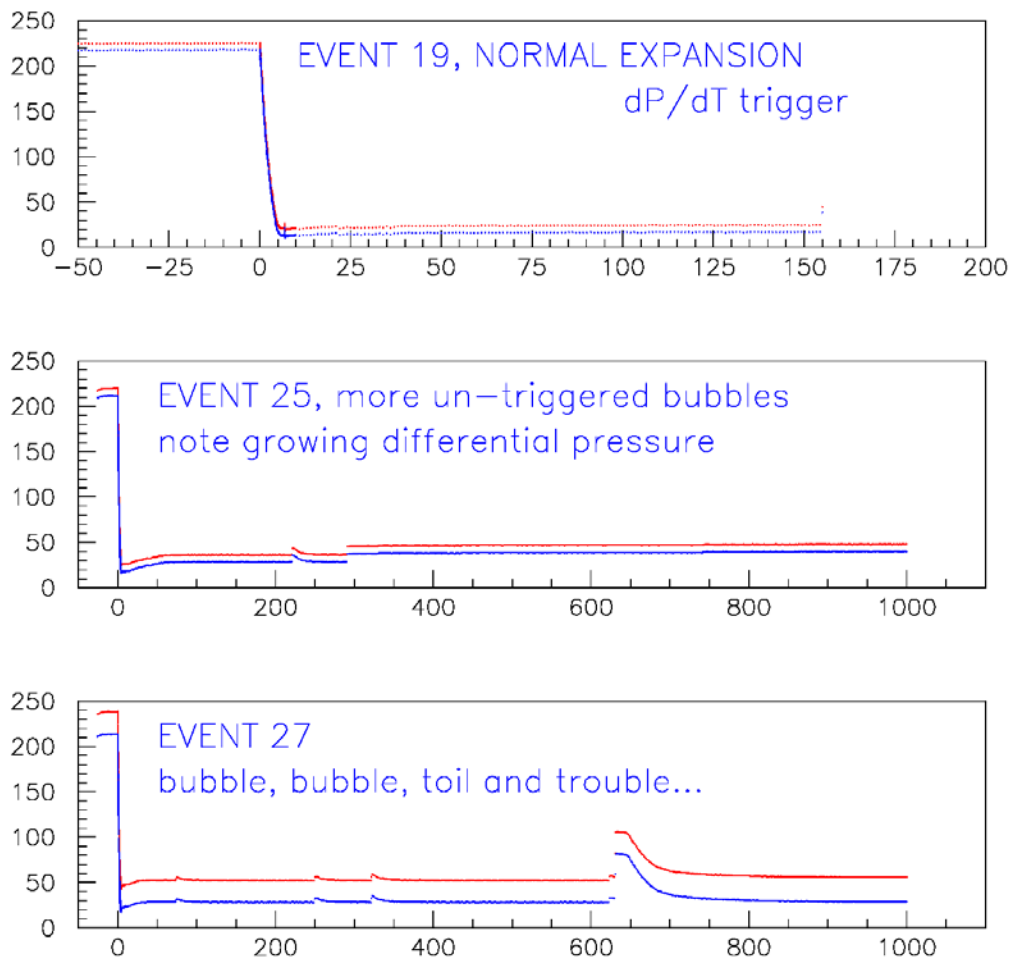

Figure 7: Expansion histories for events 19, 25, and 27. Through these plots we see an increasing differential between the hydraulic pressure in blue and the CF_3I pressure in red. The large bubble roughly 630 sec into the event 27 expansion was the point where we exceeded the capacity of the system. The hydraulic ram withdrew enough fluid to pull the hydraulic pressure down to 28 psia, extending the bellows and leaving a significant pressure differential with respect to the CF_3I. When this expansion timed out, the fast piston didn't have enough range to replace the volume withdrawn by the hydraulic ram. Upon compression, the hydraulic pressure only increased to of order 100 psia.

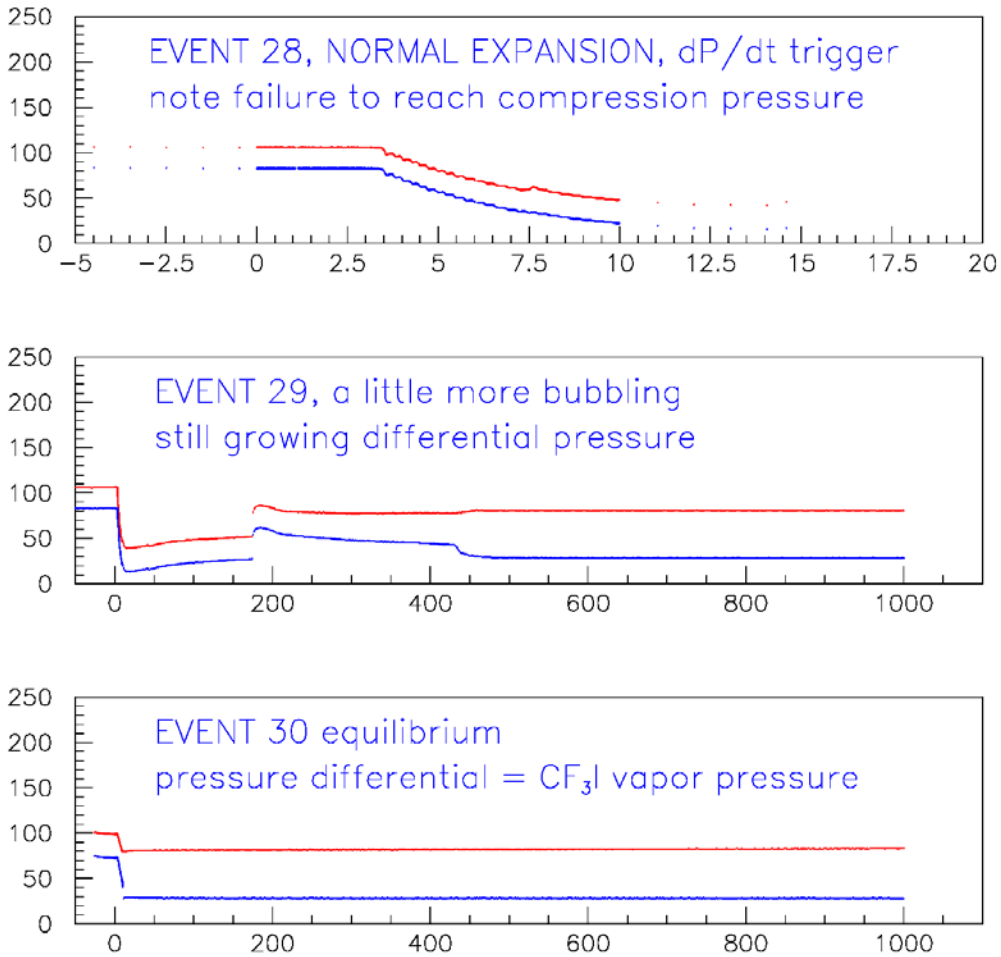

Figure 8: Expansion histories for events 28, 29, and 30. Through these plots we see an a continued increase in the differential between the hydraulic pressure in blue and the CF_3I pressure in red. Without the ability to compress the system, each new bubble simply adds to the pressure differential as we approach the ultimate equilibrium which happens midway through the expansion in event 29. At this point, the volumes have adjusted to that, upon expansion, the hydraulic system happily regulates at the pressure set point of 2 psia while the CF_3I pressure sits at the CF_3I vapor pressure. The pressure differential is balanced by the 700 lb linear force which has stretched the bellows 2.5 inches beyond its equilibrium position.

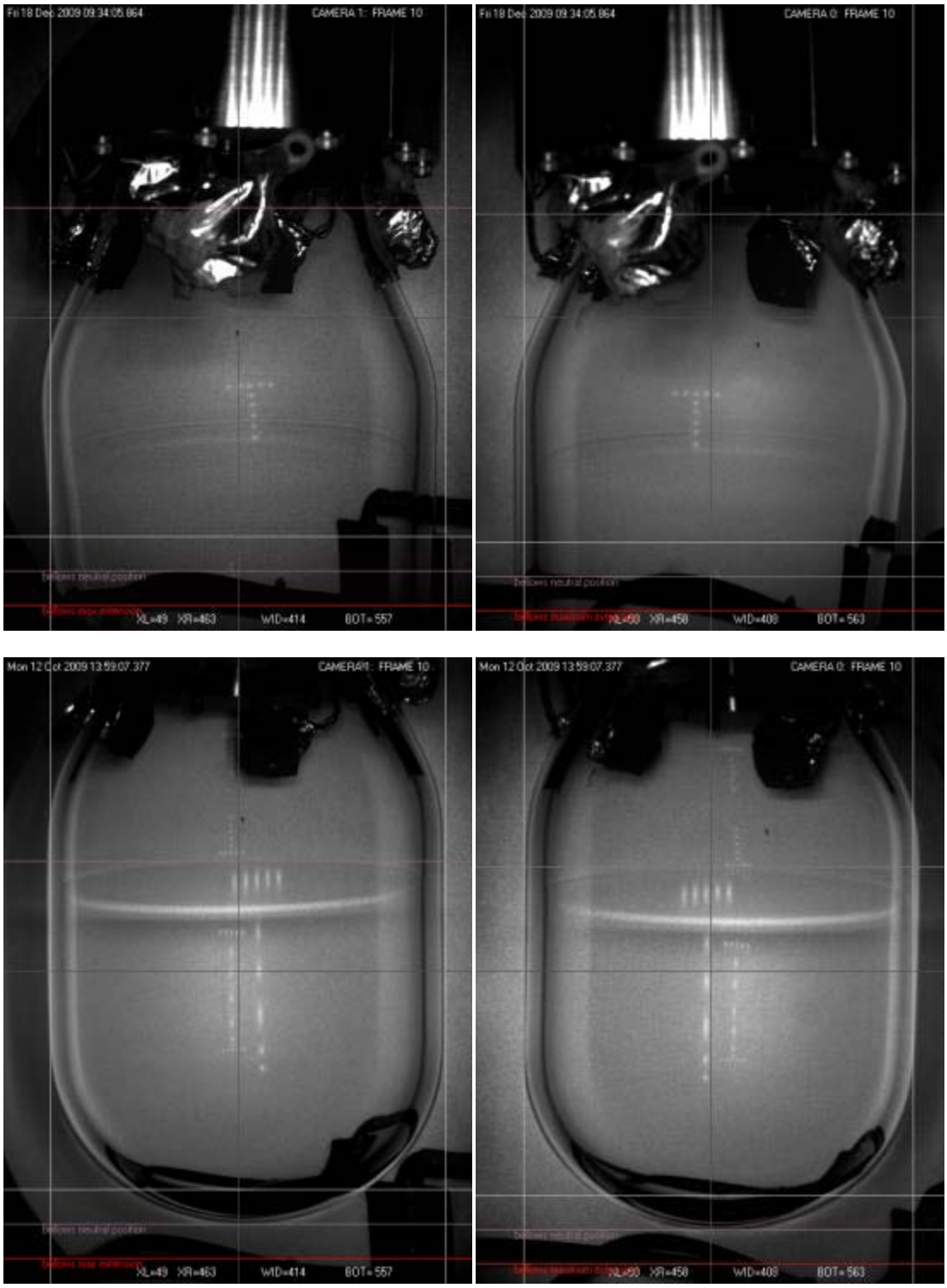

Figure 9: Images of the vessel with the bellows in its hyper-extended state (top) compared to normal (bottom.) The bellows appears to have been stretched roughly 2.5 inches beyond its normal equilibrium position.

Figure 10: This image shows the entire inner vessel assembly, which is useful for putting figure 9 into a proper context. In our normal images one can see the entire vessel including the acoustic sensors and a hint of the bolt heads from the top flange. In the hyper-extended condition, one can see well up the backing flange nearly to the bellows flange joint.

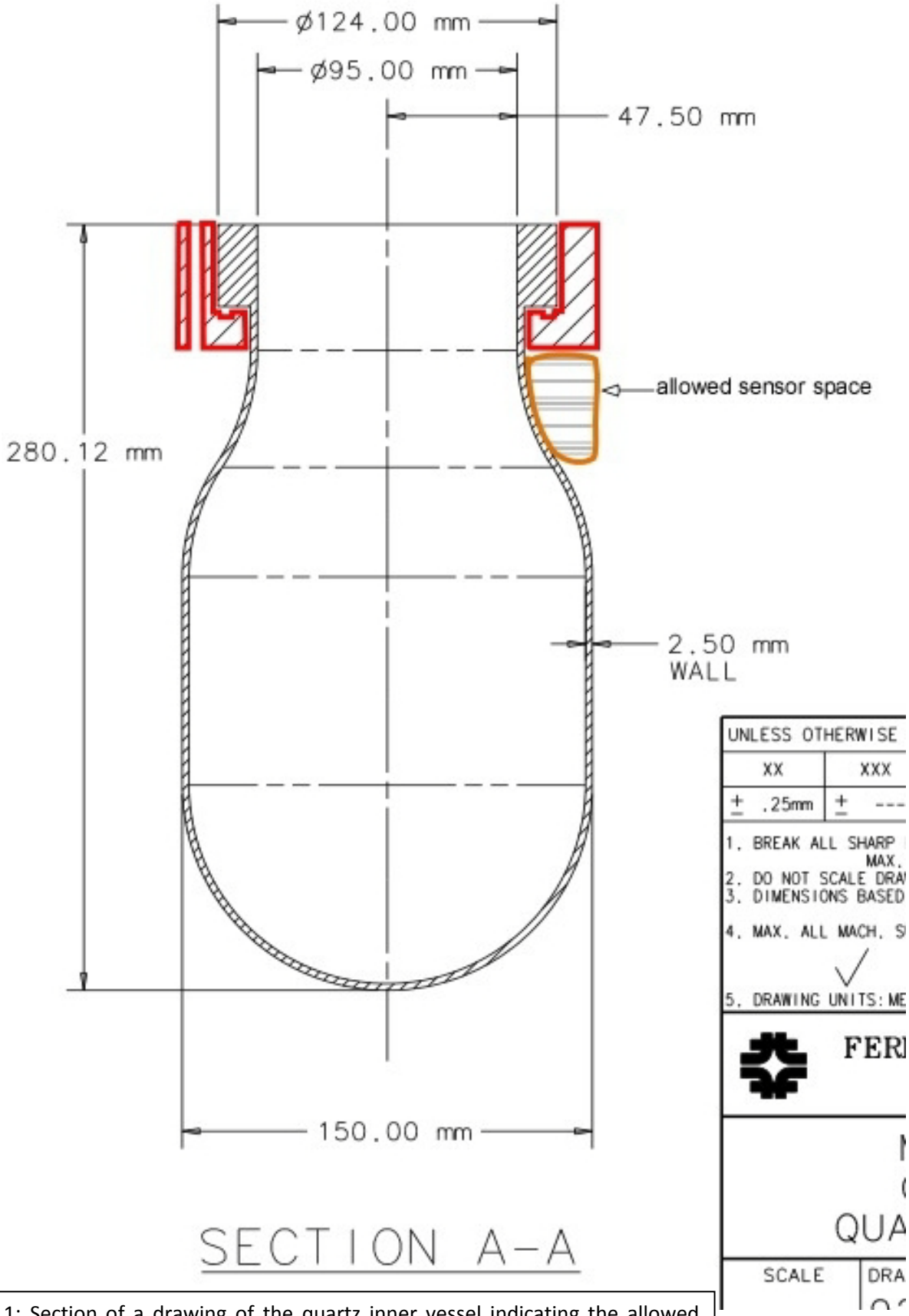

Figure 11: Section of a drawing of the quartz inner vessel indicating the allowed regions for acoustic transducer installation.

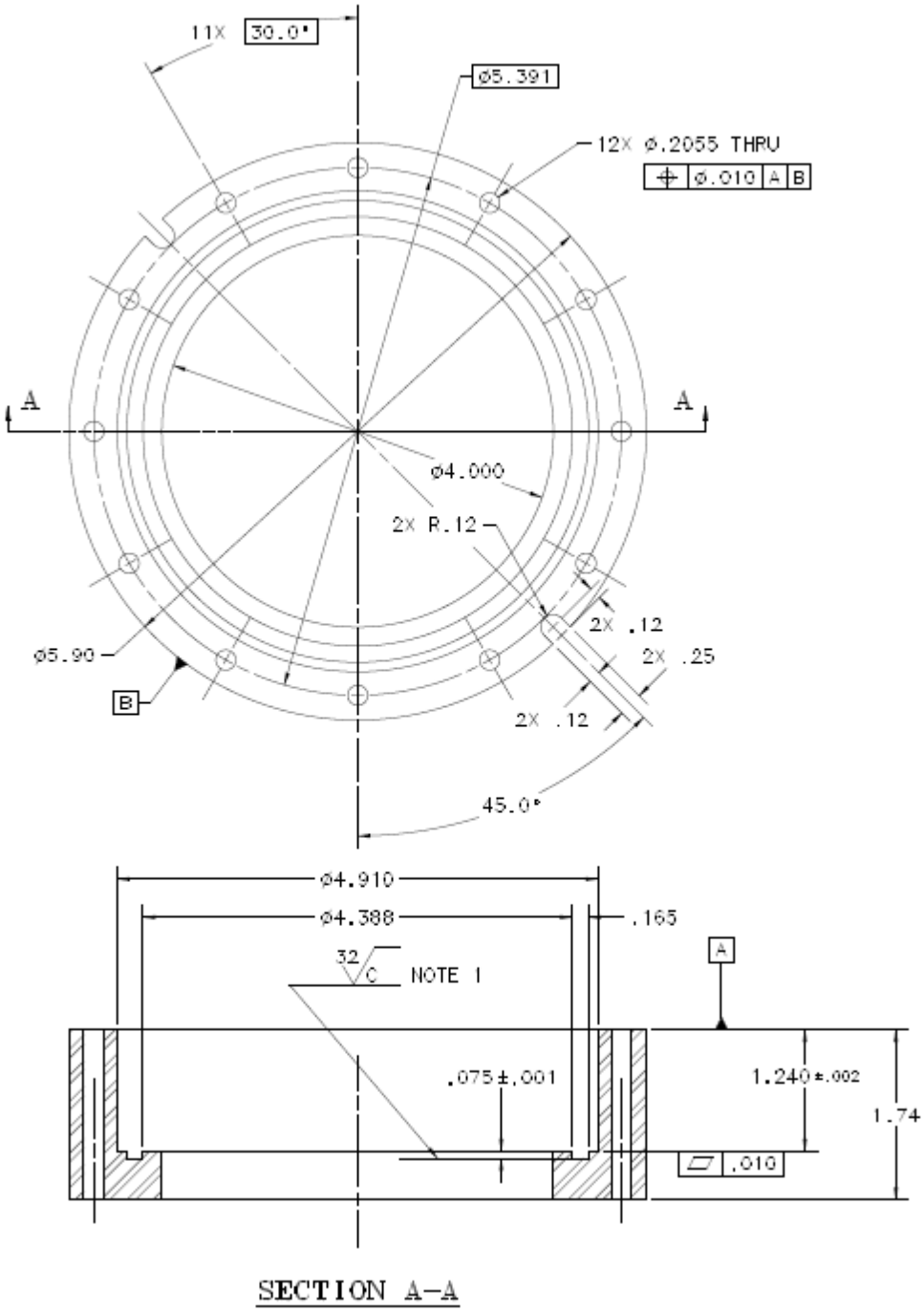

Figure 12: A portion of the drawing of the backing flange which provides the force which closes the quartz-to-metal-seal clamping the inner vessel to the bellows flange.

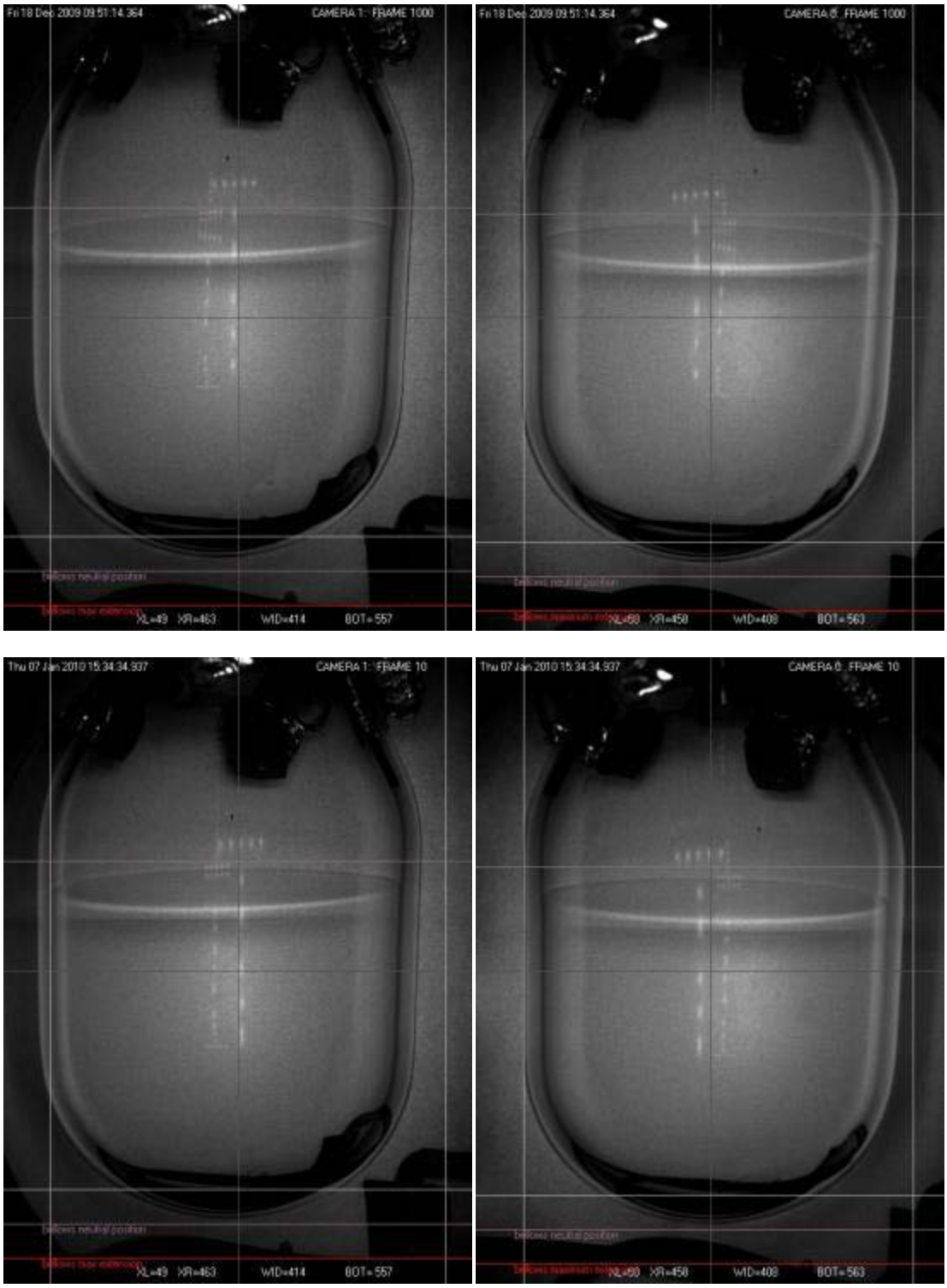

Figure 13: Images of the vessel shortly after recovery of the correct hydraulic ram positions (top) compared to three weeks later January 7, 2010 (bottom.) Immediately after the stretch, the vessel is clearly tilted. This obviously indicates permanent damage to the bellows because the elastic limit was significantly exceeded. That resulting distortion was asymmetric. By January 7, there was some recovery toward a more symmetric orientation of the vessel. Some of the jar movement downward resulted from an increase in temperature, but there is also a clear reduction in the tilt.

What Could We Have Done Differently to Prevent the Failure?

1) Error Capturing in the Video Data Acquisition Loops: In addition to image data, the video loops return a frame skip count and δt since the previous frame. The frame skip counter is derived from an absolute frame number provided by the video driver. Operating correctly at 100 Hz, the loops should always return skip=0 and δt=10 milliseconds. In the data from 20091218_0 the skip counter was consistently -1 indicating a non-advancing frame number, and the δt values were consistently a few milliseconds indicating that the loop was no longer constrained by the time delay required to actually transfer the data from the cameras. Flagging either of these anomalous values would have provided the software tag necessary to disable the run.

2) Improved Pressure Triggering: The pressure trigger in COUPP 2L is based on two pressure transducers. One sees the inner vessel (CF_3I) pressure, one the hydraulic pressure. The signals were filtered and oversampled to reduce noise, but the filtering was based on allowing enough bandwidth to make a prompt trigger (at the 10-msec level, comparable to the video trigger.) In fact, this didn't work especially well. We never attained good enough noise performance to make a pressure trigger that matched the video trigger. Since the video trigger worked sufficiently well to use alone, the pressure trigger effort was left somewhat incomplete. In fact, had we given up on the goal of a fast pressure trigger then the same signals could have been filtered to the .5 Hz level or so to provide a more accurate pressure measurement and a robust trigger on gross pressure rise. This trigger would have a very sharp threshold in dP at the expense of a very slow time response. While not suitable for a physics data trigger (and not necessary) this trigger would be plenty fast to compress the chamber well ahead of the response time of the pressure regulation stepping motor.

3) Better attention to the absolute motion and control limits on the hydraulic cart. It was a conscious decision not to impose hard limits (either cart firmware or limit switches) on the motion range of the hydraulic ram. This arose due to "fighting the last war" in which the biggest problem we faced was temperature instability and some leaking of hydraulic fluid. The large motion range of the HRAM was necessary to cover the thermal expansion over the range from filling to operating the chamber. At the beginning of the 2009 run, we had the intention of developing a software controlled temperature regulation loop, but this was not finalized until near the end of our run preparations. My concern at the outset was that while a tight limit on the piston movement would protect us against any triggering failure, a broad range of free ram movement would be necessary to protect us against any software failure in the temperature control loop. In practice, our temperature control loop had turned out to be very robust. With a much better understanding of the behaviors of the individual components of the experiment, we could develop a well engineered set of limits which would require tight limits on the

temperature control hardware which match the set limits on the hydraulic ram range. This is actually a subtle problem, but I think we can do a better job with the hardware we have. Fundamentally this is a reflection of some of the architectural shortcomings in the design of our 2nd generation hydraulic cart which will be discussed in the next section.

Deeper Issues: Architectural Issues with DAQ/Controls:

The device that controls P and V has no knowledge of T. P and V are managed by the hydraulic cart, T is managed by a PID loop in the DAQ which interacts with the NESLAB heater/chiller. PV and T only come together in the DAQ. This means that "soft" communication links play a role in crucial controls operations.

The generation 2 hydraulic cart used in COUPP 2L represented a significant improvement over our original "first generation" system used with the original 1L bubble chamber. The architecture of our first generation experiment drew no distinction between DAQ and controls. A single DAQ/control computer managed all functions. A single large piston was used for both expansion/compression and pressure control, and the pressure regulation was accomplished by controlling the air pressure on the compressed air side. This scheme resulted in very poor regulation because the friction on the piston system caused fluctuating differences between the regulated pressure (fluid) and the control (air.) Additionally, the force differential required to move the piston went to zero as the hydraulic pressure approached the desired set value. The result was a system that drifted without regulation until it got sufficiently off to overcome the friction in the piston. At which point it would slip and over correct. It never worked very well. The lack of an architectural boundary between DAQ and control also had operational implications in that stopping the DAQ also meant turning off any monitor or controls over the live chamber.

In our second generation system, the architecture was significantly improved. The equipment involved in hydraulic controls was brought together into a self contained "hydraulic cart." The cart used two separate piston systems, one to control the fast compression and expansion and the other to manage slow pressure regulation during the expanded state. These were significant improvements, but there were still issues. In the design of the generation 2 cart, we used a limited capability industrial controller and gave the cart rather limited functionality. Some crucial functionality such as pressure triggering and the management of the overall states of the system were reserved to the DAQ computer. This meant that communication between the cart and the DAQ was crucial for safe operations. That was a mistake we identified and corrected in the design of the generation 3 hydraulic cart used on the 60-kg chamber.

In the 60-kg chamber, the hydraulic cart was required to be a stand-alone manager of the states and safety of the bubble chamber. That cart is equipped with a much more powerful industrial controller and has direct access to all temperature, pressure, and volume sensor information.

Deeper Still: Insufficient Resources, Poor Resource Management, Organizational Issues

There is a significant technical divergence between the COUPP R&D efforts and COUPP 60kg

From the outset, it was clear that the successful development of a large-scale, low-background dark matter search based on the COUPP bubble chamber technology would require a robust R&D program. The technology provided spectacular rejection of gamma and beta backgrounds, but was extremely vulnerable to backgrounds from alpha decays in the chamber fluid. To make a successful experiment, it would be necessary to develop either (a) spectacular fluid purification technology, (b) scintillation based discrimination of alpha events or (c) some other idea which turned out to be acoustic discrimination. That was the original motivation for constructing four of the generation 2 hydraulic carts. In the early phases of the experiment, all of the Fermilab COUPP support came from the Korinek/Lindenmeyer Group in the PPD/Tech Centers Department. Tech Centers did a fine job of producing 4 hydraulic carts to our specifications, and our specifications reflected our best understanding of our needs as of 2007 when they were developed. Tech Centers also produced other very useful R&D infrastructure.

When the E-961 proposal was approved, we began to receive significant support from the PPD Mechanical Department. Our improved understanding of the requirements led to a much better design for the generation 3 hydraulic controller. Had we stopped and retro-fitted the original generation 2 carts to make them architecturally equivalent to the generation 3 carts, then we would not have later faced the (larger) task of designing data acquisition systems around two different control schemes. Here we ran into a PPD organizational issue in that PPD/MD and PPD/TC use different controls hardware and software products. For reasons lost to history, the PPD/MD efforts were focused almost exclusively on the 60 kg device, while engineering/design support for our R&D efforts was required to come from PPD/TC. That led to a technical divergence in which we couldn't use PPD/TC to rebuild the carts in the PPD/MD model, and we couldn't get that work done in PPD/MD since they were not for the 60-kg device. Ultimately, there is little technically in common between our R&D efforts and the 60-kg effort. Each now has different DAQ architecture and software, different controls architecture and software, different instrumentation, different photography and illumination.

In managing the limited resources available to the R&D side of COUPP, it has always been necessary to try and focus effort primarily on development that could go forward into the next generation devices. The COUPP-2L DAQ, though not used in the 60 kg chamber, remains a solid candidate for use in future devices. However, devoting significant additional work to the generation 2 cart would be an evolutionary dead-end, hence the strong desire to use the cart "as is" and work around the shortcomings. (Again the shortcomings I'm referring to are in our design specifications, not in the execution by Tech Centers.) Had we made better choices earlier in the project, we would likely be in a much stronger position today.

Still Deeper: COUPP Project Management and Strategic Planning Failures.

We have operated in the past and continue to operate without valid project planning information. The lack of reliable project planning information continues challenge our planning and decision making efforts.

When the COUPP-2L device was nearing completion early in 2009, the work had been proceeding under considerable schedule pressure based on the perceived schedule for the COUPP 60-L chamber. The value of deploying a 4-kg device in the late summer only a month or so ahead of the 60-kg device seemed very questionable. The collaboration in fact made a decision not to pursue the 4-kg run as a "physics run" but to go ahead with the commissioning as a training exercise which might benefit some of the folks working on the 60-kg device who had limited hands-on experience working with bubble chambers. The perception that the run was a training exercise further reduced the available resources and somewhat lowered the standards for operational procedures, review, and oversight as we proceeded through the final stages of commissioning.

The successful operation of the device, the very low alpha decay rate, and the spectacular acoustic transducer performance were happy surprises. Had we been working with a realistic schedule for the 60-kg deployment, we would likely have made better resource allocation and planning decisions and would likely be in a much stronger position today.

Now as we contemplate what to do next with this chamber, we are again under considerable resource and schedule pressure based on the perceived schedule of the 60 kg chamber. The lack of reliable project planning information continues challenge our planning and decision making efforts.